BALIWALA

10 BIRCH LANE, WALDWICK, NJ

DRAWING LIST

		BID SET	PERMIT SET
T-1	TITLE SHEET	•	•
G-1	SPECIFICATIONS	•	•
G-2	SPECIFICATIONS	•	•
G-3	SPECIFICATIONS	•	•
G-4	SPECIFICATIONS	•	•
G-5	SPECIFICATIONS	•	•
G-6	GENERAL NOTES	•	•
G-7	LEGEND AND ABBREVIATIONS	•	•
A-100	FOUNDATION PLAN	•	•
A-101	FIRST FLOOR PLAN	•	•
A-102	SECOND FLOOR PLAN	•	•
A-110	ROOF PLAN	•	•
A-112	WINDOW SCHEDULE	•	•
A-201	EXTERIOR ELEVATIONS	•	•
A-202	EXTERIOR ELEVATIONS	•	•
A-203	3D AXONOMETRIC	•	•
A-301	BUILDING SECTIONS	•	•
A-302	BUILDING SECTIONS	•	•
A-410	WALL SECTION, WALL DETAILS	•	•
A-411	DETAILS		•
A-601	STAIR PLANS & SECTIONS	•	•
A-604	PARTITION TYPES & RISER DIAGRAMS	•	•
A-801	SIDING & WINDOW DETAILS	•	•
A-802	ROOF DETAILS	•	•
A-803	STUCCO DETAILS	•	•
A-901	FINISH PLANS	•	•
S-100	FOUNDATION & FIRST FLOOR FRAMING PLAN	•	•
S-101	SECOND FLOOR FRAMING PLAN	•	•
S-102	SECOND FLOOR CEILING FRAMING PLAN	•	•
S-103	ROOF FRAMING PLAN	•	•
S-105	STRUCTURAL DETAILS	•	•
E-1	BASEMENT ELECTRICAL PLAN	•	•
E-2	1ST FLOOR ELECTRICAL PLAN	•	•
E-3	2ND FLOOR ELECTRICAL PLAN	•	•

PROJECT DESCRIPTION

CONSTRUCTION OF NEW SINGLE FAMILY RESIDENCE.

PROJECT REQUIREMENTS

1. G.G. TO PROVIDE 3 ZONES OF AIR CONDITIONING AND HIGH EFFECIENCY HEATING.

2. G.C. TO PROVIDE TANKLESS HOT WATER HEATER.

3. G.C. TO PROVIDE WATER SOFTENER & WHOLE HOUSE FILTRATIONS.

4. G.C. TO PROVIDE MAKE-UP AIR AT KITCHEN EXHAUST HOOD.

5. G.C. TO PROVIDE WHOLE BASEMENT DEHUMIDIFICATION.

6. G.C. TO PROVIE WHOLE HOUSE GENERATOR.

7. G.C. TO COORDINATE WITH HOMEOWNER/PROVIDERS ON LOW VOLTAGE POWER NEEDS FOR MOTORIZED SHADES, SPEAKERS, AND SECURITY SYSTEM.

8. G.C. TO COORDINATE WITH HOMEOWNER ON ALL FIREPLACE SPECIFICATIONS PRIOR TO FRAMING COMMENCEMENT TO VERIFY FRAMING CLEARANCES.

9. G.C.TO COORDINATE WITH HOMEOWNER ON LOCATION FOR GAS LINE FOR OUTDOOR KITCHEN.

PRICING ALTERNATES

1. ..G..C. TO PROVIDE PRICING ALTERNATE FOR 10' CEILINGS AND 10' POURED WALLS, IN LIEU OF 9'.

2. G.C. TO PROVIDE PRICING DEDUCT FOR HARDIE BOARD SIDING WITH 6" AZEK CORNER BOARD, INLIEU OF STUCCO, TYP.

APPLICABLE BUILDING CODES:

NJAC 5:23-6.1 - RECONSTRUCTION
INTERNATIONAL BUILDING CODE - NJ EDITION 2021
INTERNATIONAL RESIDENTIAL CODE - NJ EDITION 2021
NATIONAL ELECTRICAL CODE 2020
NATIONAL STANDARD PLUMBING CODE 2021
INTERNATIONAL ENERGY CONSERVATION CODE 2021 (Low-Rise Residential)
INTERNATIONAL MECHANICAL CODE 2021
INTERNATIONAL FUEL GAS CODE 2021
BARRIER FREE SUBCODE (Chapter 11 of IBC/2021 & NJAC 5:23-7)
ICC / ANSI A117.1 - 2017

USE GROUP	R-5
TYPE OF CONSTRUCTION	VB

FIRE RESISTANCE RATING REQUIREMENTS FOR BUILDING ELEMENTS (TABLE 601)

EXTERIOR WALLS LESS THAN 3'-0" FROM PROPERTY LINE	1 HR.
ALL OTHER EXTERIOR WALLS	0 HR.
INTERIOR WALL	0 HR.
ROOF CONSTRUCTION	0 HR.
FLOOR CONSTRUCTION	0 HR.

DESIGN LOADS:

ROOF	40 P.S.F. LIVE LOAD + 15 P.S.F. DEAD LOAD
1ST FLOOR	40 P.S.F. LIVE LOAD + 10 P.S.F. DEAD LOAD
2ND FLOOR	30 P.S.F. LIVE LOAD + 10 P.S.F. DEAD LOAD
INTERIOR STAIRS	40 P.S.F. LIVE LOAD + 10 P.S.F. DEAD LOAD*
DECKS	40 P.S.F. LIVE LOAD + 15 P.S.F. DEAD LOAD
EXTERIOR BALCONIES	60 P.S.F LIVE LOAD

1. *INDIVIDUAL STAIR THREADS SHALL BE DESIGNED FOR THE UNIFORMLY DISTRIBUTED LIVE LOAD OR A 300 LB CONCENTRATED LOAD ACTING OVER AN AREA OF 4 SQ. IN. WHICHEVER PRODUCES THE GREATER STRESS.

2. SEISMIC LOADING TO BE BASED ON REQUIREMENTS OF SECTION R301 THE 2021 INTERNATIONAL RESIDENTIAL CODE.

3. WIND SPEED CRITERIA:
INTERPOLATED FROM FIGURE R301.2(4) OF THE INTERNATIONAL RESIDENTIAL CODE 2021, THE DESIGN FOR THIS BUILDING WILL RESIST A WIND SPEED OF 112 MPH.

BUILDING DATA

PROPERTY BLOCK #: 163.16
PROPERTY LOT #: 18.04

PROPOSED FIRST FLOOR:	2,127 SF
PROPOSED SECOND FLOOR:	2,102 SF
PROPOSED GARAGE:	644 SF
TOTAL PROPOSED:	4,873 SF
PROPOSED TOTAL VOLUME:	59,240 CF
AREA OF LARGEST FLOOR:	2,127 SF
TOTAL LAND AREA DISTURBED:	00000 SF

- **THE FOLLOWING SECTIONS OF THE MECHANICAL CODE OF THE IRC IS INTENDED TO BE A GUIDE AND DOES NOT RELIEVE THE CONTRACTOR AND/OR SUBCONTRACTOR OF THEIR OBLIGATIONS TO BUILD, FABRICATE AND INSTALL PER THE CURRENT ADOPTED BUILDING CODES.**

M1503.2 DOMESTIC COOKING EXHAUST.

WHERE DOMESTIC COOKING EXHAUST EQUIPMENT IS PROVIDED, IT SHALL COMPLY WITH ONE OF THE FOLLOWING:
1. THE FAN FOR OVERHEAD RANGE HOODS ND DOWNDRAFT EXHAUST EQUIPMENT NOT INTEGRAL WITH THE COOKING APPLIANCE SHALL BE LISTED AND LABELED IN ACCORDANCE WITH UL 507.
2. OVERHEAD RANGE HOODS AND DOWNDRAFT EXHAUST EQUIPMENT WITH INTEGRAL FANS SHALL COMPLY WITH UL 507.
3. DOMESTIC COOKING APPLIANCES WITH INTEGRAL DOWNDRAFT EXHAUST EQUIPMENT SHALL BE LISTED AND LABELED IN ACCORDANCE WITH ANSI Z21.1 OR UL 858
4. MICROWAVE OVENS WITH INTEGRAL EXHAUST FOR INSTALLATION OVER THE COOKING SURFACE SHALL BE LISTED AND LABELED IN ACCORDANCE WITH UL 923.

M1503.3 EXHAUST DISCHARGE.

DOMESTIC COOKING EXHAUST EQUIPMENT SHALL DISCHARGE TO THE OUTDOORS THROUGH A DUCT. THE DUCT SHALL HAVE A SMOOTH INTERIOR SURFACE, SHALL BE AIRTIGHT, SHALL BE EQUIPPED WITH A BACKDRAFT DAMPER AND SHALL BE INDEPENDENT OF ALL OTHER EXHAUST SYSTEMS. DUCTS SERVING DOMESTIC COOKING EXHAUST EQUIPMENT SHALL NOT TERMINATE IN AN ATTIC OR CRAWL SPACE OR AREAS INSIDE THE BUILDING.

EXCEPTION: WHERE INSTALLED IN ACCORDANCE WITH THE MANUFACTURE'S INSTRUCTIONS, AND WHERE MECHANICAL OR NATURAL VENTILATION IS OTHERWISE PROVIDED, LISTED AND LABELED DUCT-LESS RANGE HOODS SHALL NOT BE REQUIRED TO DISCHARGE TO THE OUTDOORS.

M1053.5 KITCHEN EXHAUST RATES.

WHERE DOMESTIC KITCHEN COOKING APPLIANCES ARE EQUIPPED WITH DUCTED RANGE HOODS OR DOWN-DRAFT EXHAUST SYSTEMS, THE FANS SHALL BE SIZED IN ACCORDANCE WITH SECTION M1505.4.4.

M1503.6 MAKEUP AIR REQUIRED.

WHERE ONE OR MORE GAS, LIQUID OR SOLID FUEL-BURNING APPLIANCE THAT IS NEITHER DIRECT-VENT NOR USES A MECHANICAL DRAFT VENTING SYSTEM IS LOCATED WITHIN A DWELLING UNIT'S AIR BARRIER, EACH EXHAUST SYSTEM CAPABLE OF EXHAUSTING IN EXCESS OF 400 CUBIC FEET PER MINUTE (0.19 m3/s) SHALL BE MECHANICALLY OR PASSIVELY PROVIDED WITH MAKEUP AIR AT A RATE APPROXIMATELY EQUAL TO THE EXHAUST AIR RATE. SUCH MAKEUP AIR SYSTEM SHALL BE EQUIPPED WITH NOT FEWER THAN ONE DAMPER COMPLYING WITH SECTION M1503.6.2.

EXCEPTION: MAKEUP AIR IS NOT REQUIRED FOR EXHAUST SYSTEMS INSTALLED FOR THE EXCLUSIVE PURPOSE OF SPACE COOLING AND INTENDED TO BE OPERATED ONLY WHEN WINDOWS OR OTHER AIR INLETS ARE OPEN.

M1505.2 RECIRCULATION OF AIR

EXHAUST AIR FROM BATHROOMS AND TOILER ROOMS SHALL NOT BE RECIRCULATED WITH A RESIDENCE OR CIRCULATED TO ANOTHER DWELLING UNIT AND SHALL BE EXHAUSTED DIRECTLY TO THE OUTDOORS. EXHAUST AIR FROM BATHROOMS, TOILET ROOMS AND KITCHENS SHALL NOT DISCHARGE INTO AN ATTIC, CRAWL SPACE OR OTHER AREAS INSIDE THE BUILDING. THIS SECTION SHALL NOT PROHIBIT THE INSTALLATION OF DUCTLESS RANGE HOODS IN ACCORDANCE WITH THE EXCEPTION IN SECTION M1503.3.

M1505.3 EXHAUST EQUIPMENT.

EXHAUST FANS AND WHOLE-HOUSE MECHANICAL VENTILATION FANS SHALL BE LISTED AND LABELED AS PROVIDING THE MINIMUM REQUIRED AIRFLOW IN ACCORDANCE WITH ANSI / AMCA 210-ANSI / ASHRAE 51.

M1505.4 WHOLE-HOUSE MECHANICAL VENTILATION SYSTEM.

WHOLE-HOUSE MECHANICAL VENTILATION SYSTEM SHALL BE DESIGNED IN ACCORDANCE WITH SECTION M1505.4.1 THROUGH M1505.4.4

- M1505.4.1 SYSTEM DESIGN
  THE WHOLE-HOUSE VENTILATION SYSTEM SHALL CONSIST OF ONE OR MORE SUPPLY OR EXHAUST FANS, OR A COMBINATION OF SUCH, AND ASSOCIATED DUCTS AND CONTROLS. LOCAL EXHAUST OR SUPPLY FANS ARE PERMITTED TO SERVE AS SUCH A SYSTEM, OUTDOOR AIR DUCTS CONNECTED TO THE RETURN SIDE OF AN AIR HANDLER SHALL BE CONSIDERED AS PROVIDING SUPPLY VENTILATION.

- M1505.4.2 SYSTEM CONTROLS.
  THE WHOLE-HOUSE MECHANICAL VENTILATION SYSTEM SHALL BE PROVIDED WITH CONTROLS THAT ENABLE MANUAL OVERRIDE. CONTROLS SHALL INCLUDE TEXT OR SYMBOL INDICATING THEIR FUNCTION.

- M1505.4.3 MECHANICAL VENTILATION RATE.
  THE WHOLE-HOUSE MECHANICAL VENTILATION SYSTEM SHALL PROVIDE OUTDOOR AIR AT A CONTINUOUS RATE NOT LESS THAN THAT DETERMINED IN ACCORDANCE WITH TABLE M1505.4.3(1) OR NOT LESS THAN THAT DETERMINED BY EQUATION 15-1.

  Ventilation rate in cubic feet per minute = (0.01 x total square foot area of house) + [7.5 x (number of bedrooms + 1)]

EXCEPTIONS:
1. VENTILATION RATE CREDIT. THE MINIMUM MECHANICAL VENTILATION RATE DETERMINED IN ACCORDANCE WITH TABLE M1505.4.3(1) OR EQUATION 15-1 SHALL BE REDUCED BY 30 PERCENT, PROVIDED THAT BOTH OF THE FOLLOWING CONDITIONS APPLY"
   1.1 A DUCTED SYSTEM SUPPLIES VENTILATION AIR DIRECTLY TO EACH BEDROOM AND TO ONE OR MORE OF THE FOLLOWING ROOMS:
      1.1.1 LIVING ROOM.
      1.1.2 DINING ROOM.
      1.1.3 KITCHEN.
   1.2 THE WHOLE-HOUSE VENTILATION SYSTEM IA A BALANCED VENTILATION SYSTEM.
2. PROGRAMMED INTERMITTENT OPERATION. THE WHOLEHOUSE MECHANICAL VENTILATION SYSTEM IS PERMITTED TO OPERATE INTERMITTENTLY WHERE THE SYSTEM HAS CONTROLS THAT ENABLE OPERATION FOR NOT LESS THAN 25 PERCENT OF EACH 4-HOUR SEGMENT AND THE VENTILATION RATE PRESCRIBED IN TABLE M1505.4.3(1), BY EQUATION 15-1 OR BY EXCEPTION 1 IS MULTIPLIED BY THE FACTOR DETERMINED IN A ACCORDANCE WITH TABLE M1505.4.3(2)

THE FOLLOWING ARE THE PATHS AND OPTIONS FOR COMPLIANCE WITH THE ENERGY EFFICIENCY REQUIREMENTS OF THE INTERNATIONAL ENERGY CONSERVATION CODE OF NJ 2021 EDITION:

(any deviations from the list below, must be brought to the architects attention prior to any installation or field changes. Energy compliance must be recalculated with the proposed changes against what has already been submitted with the permit of these construction documents. any building system that has been modified or substituted without architects approval and such system installed and now does not comply, shall be replaced at no additional cost to the owner.)

FOR OUR COMPLIANCE WITH RESCHECK-web: The online program performs the calculations based on input about the shape and size of the building, the type of insulation and windows and the type of equipment that the applicant proposes to use. The program simply requires the input of the areas of the various components, the R-value of insulation, and the U-factor of windows and doors. Based on Section R402.1.5, entitled "Total UA alternative," the program automatically gives tradeoffs. A compliance report is generated by the program, which is to be submitted with the permit application. It must meet or exceed the IECC-R ("passes" by zero percent or better) based on the applicable climate zone location specified for each municipality.

Regardless of the compliance method chosen, an ***additional energy efficiency package*** is required. At least one package from Section R408 IECC, must be included for compliance: For compliance with RESCheck, Z+ has chosen, " More efficienct HVAC equipment performance option, from the list below.

☐ Enhanced envelope performance option;
☐ More efficient HVAC equipment performance option;
☐ Reduced energy use in service water-heating option;
☐ More efficient duct thermal distribution system option; or
☐ Improved air sealing and efficient ventilation system option.

BUILDING THERMAL ENVELOPE	R-VALUE	U-FACTOR
FOUNDATION WALLS	R-5 RIGID + R-15 BATT	
FLOORS	R-47 (4" CLOSED CELL + R-21 BATT)	
BASEMENT SLAB	(4'-0" OF R-10)	
EXTERIOR WALLS	R-3 ZIP + R-21 BATT	
ROOFS	R-47 (4" CLOSED CELL + R-21 BATT)	
WINDOWS - DOUBLE HUNG		.30
WINDOWS - CASEMENT		.29

NOTE TO CONTRACTOR:

ANY DEVIATIONS FROM THIS SET OF CONSTRUCTION DRAWINGS SHALL NOT BE PERMITTED WITHOUT THE WRITTEN AUTHORIZATION BY THE ARCHITECT, NO EXCEPTIONS. ANY DEVIATION, BY THE CONTRACTOR AND / OR OWNER, THAT WILL REQUIRE THIS OFFICE TO REDESIGN ANY ASPECT OF THESE DRAWINGS OR REQUIRE THIS OFFICE TO ADDRESS ANY DEVIATIONS WITH THE LOCAL CODE OFFICIAL WILL BE DONE ON A TIME AND MATERIAL BASIS.

2 3D VIEW - TITLE SHEET

ARCHITECTS LLC
240 WEST CRESCENT AVENUE
ALLENDALE, NJ 07401
TEL: 201.785.8855
www.zplusarchitects.com

PROJECT TEAM:

CIVIL
SCHWANEWEDE, HALS, & VINCE
111 LITTLETON RD #200
PARSIPPANY-TROY HILLS, NJ
201-337-0053

seal:

Michael Scro
NJ LIC# 18626

BALIWALA

10 BIRCH LANE, WALDWICK, NJ
City, State Zip

Copyright © 2019 , Z+ Architect, LLC

All dimensions and existing conditions shall be checked & verified by the contractor before proceeding with the work.

REV	DATE	DESCRIPTION

SHEET TITLE:
TITLE SHEET

DESIGN DELIVERABLE: PERMIT SET

ISSUE DATE: 06/23/25

PROJECT #: 2508

DRAWN BY: AR

CHECKED BY: MS

SHEET NUMBER: T-1

REVIT 2020

SECTION 013000 - ADMINISTRATIVE REQUIREMENTS

PART 1 GENERAL

1.01 SECTION INCLUDES
- A. General administrative requirements.
- B. Submittals for review and information.
- C. Number of copies of submittals.
- D. Requests for Information (RFI) procedures.
- E. Submittal procedures.

1.02 GENERAL ADMINISTRATIVE REQUIREMENTS
- A. Make the following types of submittals to Architect:
  1. Requests for Information (RFI).
  2. Requests for substitution.
  3. Shop drawings, product data, and samples.

PART 2 PRODUCTS - NOT USED

PART 3 EXECUTION

3.01 REQUESTS FOR INFORMATION (RFI)
- A. Definition: A request seeking one of the following:
  1. An interpretation, amplification, or clarification of some requirement of Contract Documents arising from inability to determine from them the exact material, process, or system to be installed; or when the elements of construction are required to occupy the same space (interference); or when an item of work is described differently at more than one place in Contract Documents.
  2. A resolution to an issue which has arisen due to field conditions and affects design intent.
- B. Preparation: Prepare an RFI immediately upon discovery of a need for interpretation of Contract Documents. Failure to submit a RFI in a timely manner is not a legitimate cause for claiming additional costs or delays in execution of the work.
  1. Prepare a separate RFI for each specific item.
     - a. Review, coordinate, and comment on requests originating with subcontractors and/or materials suppliers.
     - b. Do not forward requests which solely require internal coordination between subcontractors.
  2. Combine RFI and its attachments into a single electronic file. PDF format is preferred.
- C. Reason for the RFI: Prior to initiation of an RFI, carefully study all Contract Documents to confirm that information sufficient for their interpretation is definitely not included.
  1. Include in each request Contractor's signature attesting to good faith effort to determine from Contract Documents information requiring interpretation.
  2. Unacceptable Uses for RFIs: Do not use RFIs to request the following:
     - a. Approval of submittals (use procedures specified elsewhere in this section).
     - b. Different methods of performing work than those indicated in the Contract Drawings and Specifications (comply with provisions of the Conditions of the Contract).
  3. Improper RFIs: Requests not prepared in compliance with requirements of this section, and/or missing key information required to render an actionable response. They will be returned without a response, with an explanatory notation.
  4. Frivolous RFIs: Requests regarding information that is clearly indicated on, or reasonably inferable from, Contract Documents, with no additional input required to clarify the question. They will be returned without a response, with an explanatory notation.
- D. Content: Include identifiers necessary for tracking the status of each RFI, and information necessary to provide an actionable response.
  1. Official Project name and number, and any additional required identifiers established in Contract Documents.
  2. Discrete and consecutive RFI number, and descriptive subject/title.
  3. Issue date, and requested reply date.
  4. Reference to particular Contract Document(s) requiring additional information/interpretation. Identify pertinent drawing and detail number and/or specification section number, title, and paragraph(s).
     - 5. Annotations: Field dimensions and/or description of conditions which have engendered the request.
     - 6. Contractor's suggested resolution: A written and/or a graphic solution, to scale, is required in cases where clarification of coordination issues is involved, for example; routing, clearances, and/or specific locations of work shown diagrammatically in Contract Documents. If applicable, state the likely impact of the suggested resolution on Contract Time or the Contract Sum.
- E. Attachments: Include sketches, coordination drawings, descriptions, photos, submittals, and other information necessary to substantiate the reason for the request.
- F. Review Time: Architect will respond and return RFIs to Contractor within seven working days of receipt. For the purpose of establishing the start of the mandated response period, RFIs received after 3:00 PM will be considered as having been received on the following regular working day.
- G. Responses: Content of answered RFIs will not constitute in any manner a directive or authorization to perform extra work or delay the project. If in Contractor's belief it is likely to lead to a change to Contract Sum or Contract Time, promptly issue a notice to this effect, and follow up with an appropriate Change Order request to Owner.
  1. Response may include a request for additional information, in which case the original RFI will be deemed as having been answered, and an amended one is to be issued forthwith. Identify the amended RFI with an R suffix to the original number.
  2. Do not extend applicability of a response to specific item to encompass other similar conditions, unless specifically so noted in the response.
  3. Upon receipt of a response, promptly review and distribute it to all affected parties, and update the RFI Log.
  4. Notify Architect within seven working days if an additional or corrected response is required by submitting an amended version of the original RFI, identified as specified above.

3.02 SUBMITTALS FOR REVIEW
- A. When the following are specified in individual sections, submit them for review:
  1. Product data.
  2. Shop drawings.
  3. Samples for selection.
  4. Samples for verification.
- B. Submit to Architect for review for the limited purpose of checking for compliance with information given and the design concept expressed in Contract Documents.
- C. Samples will be reviewed for aesthetic, color, or finish selection.
- D. After review, provide copies and distribute in accordance with SUBMITTAL PROCEDURES article below and for record documents purposes described in Section 017800 - Closeout Submittals.

3.03 NUMBER OF COPIES OF SUBMITTALS
- A. Electronic Documents: Submit one electronic copy in PDF format; an electronically-marked up file will be returned. Create PDFs at native size and right-side up; illegible files will be rejected.
- B. Samples: Submit the number specified in individual specification sections; one of which will be retained by Architect.
  1. After review, produce duplicates.
  2. Retained samples will not be returned to Contractor unless specifically so stated.

3.04 SUBMITTAL PROCEDURES
- A. General Requirements:
  1. Use a separate transmittal for each item.
  2. Transmit using approved form.
     - a. Use Contractor's form, subject to prior approval by Architect.
  3. Sequentially identify each item. For revised submittals use original number and a sequential numerical suffix.
  4. Identify: Project; Contractor; subcontractor or supplier; pertinent drawing and detail number; and specification section number and article/paragraph, as appropriate on each copy.
  5. Apply Contractor's stamp, signed or initialed certifying that review, approval, verification of products required, field dimensions, adjacent construction work, and coordination of information is in accordance with the requirements of the work and Contract Documents.
     - a. Submittals from sources other than the Contractor, or without Contractor's stamp will not be acknowledged, reviewed, or returned.
  6. Schedule submittals to expedite the Project, and coordinate submission of related items.
     - a. For each submittal for review, allow 10 days excluding delivery time to and from the Contractor.
     - b. For sequential reviews involving Architect's consultants, Owner, or another affected party, allow an additional 7 days.
     - c. For sequential reviews involving approval from authorities having jurisdiction (AHJ), in addition to Architect's approval, allow an additional 30 days.
  7. Identify variations from Contract Documents and product or system limitations that may be detrimental to successful performance of the completed work.
  8. Provide space for Contractor and Architect review stamps.
  9. When revised for resubmission, identify all changes made since previous submission.
  10. Distribute reviewed submittals. Instruct parties to promptly report inability to comply with requirements.
  11. Incomplete submittals will not be reviewed, unless they are partial submittals for distinct portion(s) of the work, and have received prior approval for their use.
- B. Product Data Procedures:
  1. Submit only information required by individual specification sections.
  2. Collect required information into a single submittal.
  3. Submit concurrently with related shop drawing submittal.
  4. Do not submit (Material) Safety Data Sheets for materials or products.
- C. Shop Drawing Procedures:
  1. Prepare accurate, drawn-to-scale, original shop drawing documentation by interpreting Contract Documents and coordinating related work.
  2. Do not reproduce Contract Documents to create shop drawings.
  3. Generic, non-project-specific information submitted as shop drawings do not meet the requirements for shop drawings.
- D. Samples Procedures:
  1. Transmit related items together as single package.
  2. Identify each item to allow review for applicability in relation to shop drawings showing installation locations.
  3. Include with transmittal high-resolution image files of samples to facilitate electronic review and approval. Provide separate submittal page for each item image.

3.05 SUBMITTAL REVIEW
- A. Submittals for Review: Architect will review each submittal, and approve, or take other appropriate action.
- B. Submittals for Information: Architect will acknowledge receipt and review. See below for actions to be taken.
- C. Architect's actions will be reflected by marking each returned submittal using virtual stamp on electronic submittals.
  1. Notations may be made directly on submitted items and/or listed on appended Submittal Review cover sheet.
- D. Architect's and consultants' actions on items submitted for review:
  1. Authorizing purchasing, fabrication, delivery, and installation:
     - a. "Approved", or language with same legal meaning.
     - b. "Approved as Noted, Resubmission not required", or language with same legal meaning.
       - (1) At Contractor's option, submit corrected item, with review notations acknowledged and incorporated.
     - c. "Approved as Noted, Resubmit for Record", or language with same legal meaning.
       - (1) Resubmit corrected item, with review notations acknowledged and incorporated. Resubmit separately, or as part of project record documents.
       - (2) Non-responsive resubmittals may be rejected.
  2. Not Authorizing fabrication, delivery, and installation:
     - a. "Revise and Resubmit".
       - (1) Resubmit revised item, with review notations acknowledged and incorporated.
     - b. "Rejected".
       - (1) Submit item complying with requirements of Contract Documents.
- E. Architect's and consultants' actions on items submitted for information:
  1. Items for which no action was taken:
     - a. "Received" - to notify the Contractor that the submittal has been received for record only.
  2. Items for which action was taken:
     - a. "Reviewed" - no further action is required from Contractor.

A. END OF SECTION 013000

SECTION 024100 - DEMOLITION

PART 1 GENERAL

1.01 SUBMITTALS
- A. Project Record Documents: Accurately record actual locations of capped and active utilities and subsurface construction.

PART 2 PRODUCTS

2.01 MATERIALS
- A. Fill Material: as specified per civil engineer.

PART 3 EXECUTION

3.01 GENERAL PROCEDURES AND PROJECT CONDITIONS
- A. Comply with applicable codes and regulations for demolition operations and safety of adjacent structures and the public.
  1. Obtain required permits.
  2. Use of explosives is not permitted.
  3. Take precautions to prevent catastrophic or uncontrolled collapse of structures to be removed; do not allow worker or public access within range of potential collapse of unstable structures.
  4. Provide, erect, and maintain temporary barriers and security devices.
- B. Minimize production of dust due to demolition operations; do not use water if that will result in ice, flooding, sedimentation of public waterways or storm sewers, or other pollution.
- C. If hazardous materials are discovered during removal operations, stop work and notify Architect and Owner; hazardous materials include regulated asbestos containing materials, lead, PCB's, and mercury.

3.02 EXISTING UTILITIES
- A. Coordinate work with utility companies; notify before starting work and comply with their requirements; obtain required permits.
- B. Protect existing utilities to remain from damage.

3.03 SELECTIVE DEMOLITION FOR ALTERATIONS
- A. Drawings showing existing construction and utilities are based on casual field observation and existing record documents only.
- B. Maintain weatherproof exterior building enclosure except for i interruptions required for replacement or modifications; take care to prevent water and humidity damage.
- C. Remove existing work as indicated and as required to accomplish new work.
- D. Services (Including but not limited to HVAC, Plumbing, Fire Protection, Electrical, and Telecommunications): Remove existing systems and equipment as indicated.
- E. Protect existing work to remain.

3.04 DEBRIS AND WASTE REMOVAL
- A. Remove debris, junk, and trash from site.

END OF SECTION 024100

SECTION 033000 - CAST-IN-PLACE CONCRETE

PART 1 GENERAL

1.01 SUBMITTALS
- A. Product Data: Submit manufacturers' data on manufactured products showing compliance with specified requirements and installation instructions.

1.02 QUALITY ASSURANCE
- A. Perform work of this section in accordance with ACI 301 and ACI 318.
- B. Follow recommendations of ACI 305R when concreting during hot weather.
- C. Follow recommendations of ACI 306R when concreting during cold weather.

PART 2 PRODUCTS

2.01 FORMWORK
- A. Formwork Design and Construction: Comply with guidelines of ACI 347R to provide formwork that will produce concrete complying with tolerances of ACI 117.
- B. Form Materials: Contractor's choice of standard products with sufficient strength to withstand hydrostatic head without distortion in excess of permitted tolerances.
  1. Form Ties: Cone snap type that will leave no metal within 1-1/2 inches (38 mm) of concrete surface.

2.02 REINFORCEMENT MATERIALS
- A. Reinforcing Steel: ASTM A615/A615M, Grade 60 (60,000 psi) (420 MPa).
  1. Type: Deformed billet-steel bars.
  2. Finish: Epoxy coated in accordance with ASTM A775/A775M, unless otherwise indicated.
- B. Steel Welded Wire Reinforcement (WWR): Galvanized, plain type, ASTM A1064/A1064M.
  1. Form: Coiled Rolls.
  2. WWR Style: up to 7'-0" = 6x6 - 6/6 wwm
     over 7'-0" = 8x8 10/10 wwm.
- C. Reinforcement Accessories:
  1. Chairs, Bolsters, Bar Supports, Spacers: Sized and shaped for adequate support of reinforcement during concrete placement.

2.03 CONCRETE MATERIALS
- A. Cement: ASTM C150/C150M, Type I - Normal Portland type.
- B. Fine and Coarse Aggregates: ASTM C33/C33M.
- C. Water: ASTM C1602/C1602M; clean, potable, and not detrimental to concrete.
- D. Structural Fiber Reinforcement: ASTM C1116/C1116M.
- E. Early Age Crack-Control Fiber Reinforcement: ASTM C1116/C1116M.

2.04 ADMIXTURES
- A. Do not use chemicals that will result in soluble chloride ions in excess of 0.1 percent by weight of cement.
- B. Air Entrainment Admixture: ASTM C260/C260M.
- C. Accelerating Admixture: ASTM C494/C494M Type C.
- D. Retarding Admixture: ASTM C494/C494M Type B.

2.05 ACCESSORY MATERIALS
- A. Underslab Vapor Retarder: Sheet material complying with ASTM E1745, Class A; stated by manufacturer as suitable for installation in contact with soil or granular fill under concrete slabs. Single ply polyethylene is prohibited.

2.06 CONCRETE MIX DESIGN
- A. Proportioning Normal Weight Concrete: Comply with ACI 211.1 recommendations.
- B. Admixtures: Add acceptable admixtures as recommended in ACI 211.1 and at rates recommended or required by manufacturer.
- C. Fiber Reinforcement: Add to mix at rate of 1.5 pounds per cubic yard (0.89 kg per cu m), or as recommended by manufacturer for specific project conditions.
- D. Normal Weight Concrete:
  1. Compressive Strength, when tested in accordance with ASTM C39/C39M at 28 days: As indicated on drawings.

PART 3 EXECUTION

3.01 PREPARATION
- A. Formwork: Comply with requirements of ACI 301. Design and fabricate forms to support all applied loads until concrete is cured, and for easy removal without damage to concrete.
- B. Where new concrete is to be bonded to previously placed concrete, prepare existing surface by cleaning and applying bonding agent in according to bonding agent manufacturer's instructions.

3.02 INSTALLING REINFORCEMENT AND OTHER EMBEDDED ITEMS
- A. Fabricate and handle epoxy-coated reinforcing in accordance with ASTM D3963/D3963M.
- B. Comply with requirements of ACI 301. Clean reinforcement of loose rust and mill scale, and accurately position, support, and secure in place to achieve not less than minimum concrete coverage required for protection.

3.03 PLACING CONCRETE
- A. Place concrete in accordance with ACI 304R.
- B. Place concrete for floor slabs in accordance with ACI 302.1R.
- C. Finish floors level and flat, unless otherwise indicated, within the tolerances specified below.

3.04 FLOOR FLATNESS AND LEVELNESS TOLERANCES
- A. Maximum Variation of Surface Flatness:
  1. Exposed Concrete Floors: 1/8 inch (3 mm) in 10 feet (3 m).
  2. Under Seamless Resilient Flooring: 1/8 inch (3 mm) in 10 feet (3 m).
  3. Under Carpeting: 1/8 inch (3 mm) in 10 feet (3 m).
- B. Correct the slab surface if tolerances are less than specified.
- C. Correct defects by grinding or by removal and replacement of the defective work. Areas requiring corrective work will be identified. Re-measure corrected areas by the same process.

D. Where temperature reinforcement is not provided in concrete slabs other than basements, contraction joints at approximately 15'-0" intervals should be provided.

3.05 CONCRETE FINISHING
- A. Repair surface defects, including tie holes, immediately after removing formwork.
- B. Unexposed Form Finish: Rub down or chip off fins or other raised areas 1/4 inch (6 mm) or more in height.
- C. Concrete Slabs: Finish to requirements of ACI 302.1R, and as follows:
  1. Surfaces to Receive Thick Floor Coverings: "Wood float" as described in ACI 302.1R; thick floor coverings include quarry tile, ceramic tile, and Portland cement terrazzo with full bed setting system.
  2. Surfaces to Receive Thin Floor Coverings: "Steel trowel" as described in ACI 302.1R; thin floor coverings include carpeting, resilient flooring, seamless flooring, resinous matrix terrazzo, thin set quarry tile, and thin set ceramic tile.
  3. Decorative Exposed Surfaces: Trowel as described in ACI 302.1R; take measures necessary to avoid black-burnish marks; decorative exposed surfaces include surfaces to be stained or dyed, pigmented concrete, surfaces to receive liquid hardeners, surfaces to receive dry-shake hardeners, surfaces to be polished, and all other exposed slab surfaces.

3.06 CURING AND PROTECTION
- A. Comply with requirements of ACI 308R. Immediately after placement, protect concrete from premature drying, excessively hot or cold temperatures, and mechanical injury.

END OF SECTION 033000

SECTION 042000 - UNIT MASONRY

PART 1 GENERAL

1.01 SUBMITTALS
- A. Product Data: Provide data for masonry units, fabricated wire reinforcement, mortar, and masonry accessories.
- B. Samples: Submit four samples of decorative block units to illustrate color, texture, and extremes of color range.
- C. Manufacturer's Certificate: Certify that masonry units meet or exceed specified requirements.

PART 2 PRODUCTS

2.01 CONCRETE MASONRY UNITS
- A. Concrete Block: Comply with referenced standards and as follows:
  1. Size: Standard units with nominal face dimensions of 16 by 8 inches (400 by 200 mm) and nominal depth of 8 inches (200 mm).
  2. Special Shapes: Provide non-standard blocks configured for corners.
     - a. Provide bullnose units for outside corners.
  3. Load-Bearing Units: ASTM C90, normal weight.
     - a. Hollow block, as indicated.
  4. Non-Loadbearing Units: ASTM C129.
     - a. Hollow block, as indicated.

2.02 BRICK UNITS
- A. Building (Common) Brick: ASTM C62, Grade SW; cored units.
  1. Nominal size: As indicated on drawings.
- B. Glazed Brick (Single Fired, Brick Units): ASTM C1405, Grade S (standard), Type I (single-faced units), Class Exterior, Division Solid.
  1. Nominal size: As indicated on drawings.

2.03 MORTAR AND GROUT MATERIALS
- A. Masonry Cement: ASTM C91/C91M, Type N.
  1. Colored Mortar: Premixed cement as required to match Architect's color sample.
- B. Portland Cement: ASTM C150/C150M, Type I; color as required to produce approved color sample.
- C. Hydrated Lime: ASTM C207, Type S.
- D. Mortar Aggregate: ASTM C144.
- E. Grout Aggregate: ASTM C404.
- F. Water: Clean and potable.
- G. Packaged Dry Material for Mortar for Unit Masonry: Premixed Portland cement, hydrated lime, and sand; complying with ASTM C1714/C1714M and capable of producing mortar of the specified strength in accordance with ASTM C270 with the addition of water only.
  1. Color: as selected by architect from full range of color from manufacture.

2.04 REINFORCEMENT AND ANCHORAGE
- A. Single Wythe Joint Reinforcement: ASTM A951/A951M.
  1. Type: Truss or ladder.
  2. Material: ASTM A1064/A1064M steel wire, mill galvanized to ASTM A641/A641M Class 3.
  3. Size: 0.1483 inch (3.8 mm) side rods with 0.1483 inch (3.8 mm) cross rods; width as required to provide not less than 5/8 inch (16 mm) of mortar coverage on each exposure.
- B. Multiple Wythe Joint Reinforcement: ASTM A951/A951M.
- C. Adjustable Multiple Wythe Joint Reinforcement: ASTM A951/A951M.
  1. Type: Truss, with adjustable ties or tabs spaced at 16 in (406 mm) on center.
  2. Material: ASTM A1064/A1064M steel wire, hot dip galvanized after fabrication to ASTM A153/A153M Class B.
  3. Size: 0.1875 inch (4.8 mm) side rods with 0.1483 inch (3.8 mm) cross rods and adjustable components of 0.1875 inch (4.8 mm)wire, width of components as required to provide not less than 5/8 inch (16 mm) of mortar coverage from each masonry face.
- D. Residential Wall Ties: Corrugated formed sheet metal, 7/8 inch (22 mm) wide by 0.05 inch (1.22 mm) thick, hot dip galvanized to ASTM A 153/A 153M, Class B, sized to extend at least 1-1/2 inches (38 mm) into the veneer with at least 5/8 inch (16 mm) of mortar coverage from masonry face.
- E. Two-Piece Wall Ties: Formed steel wire, 0.1875 inch (4.8 mm) thick, adjustable, eye and pintle type, hot dip galvanized to ASTM A 153/A 153M, Class B, sized to provide not less than 5/8 inch (16 mm) of mortar coverage from masonry face and to allow vertical adjustment of up to 1-1/4 in (32 mm).
- F. Masonry Veneer Anchors: 2-piece anchors that permit differential movement between masonry veneer and structural backup, hot dip galvanized to ASTM A 153/A 153M, Class B.
  1. Vertical adjustment: Not less than 3-1/2 inches (89 mm).
  2. Seismic Feature: Provide lip, hook, or clip on end of wire ties to engage or enclose not less than one continuous horizontal joint reinforcement wire of 0.1483 inch (3.8 mm) diameter.

2.05 FLASHINGS
- A. Metal Flashing Materials:
  1. Stainless Steel Flashing: ASTM A666, Type 304, soft temper; 26 gauge, 0.0187 inch (0.48 mm) thick; finish 2B to 2D.
  2. Prefabricated Metal Flashing: Smooth fabricated 12 oz/sq ft (3.66 kg/sq m) copper flashing for surface mounted conditions.
- B. Combination Non-Asphaltic Flashing Materials - Copper:
  1. Copper/Polymer Film or Fabric Flashing: 3 oz/sq ft (0.915 kg/sq m) copper sheet laminated between two sheets of polyethylene film. Minimum Puncture Resistance of 780 psi (5.38 MPa), when measured in accordance with ASTM E154/E154M.
- C. Membrane Non-Asphaltic Flashing Materials:
  1. Composite Polymer Flashings - Self-Adhering: Composite polyethylene; 40 mil (1mm) thick with pressure-sensitive adhesive and release paper.
- D. Factory-Fabricated Flashing Corners and End Dams: Stainless steel.
- E. Flashing Sealant/Adhesives: Silicone, polyurethane, or silyl-terminated polyether/polyurethane or other type required or recommended by flashing manufacturer; type capable of adhering to type of flashing used.
- F. Termination Bars: Stainless steel; compatible with membrane and adhesives.
- G. Drip Edge: Stainless steel; angled drip with hemmed edge; compatible with membrane and adhesives.

2.06 ACCESSORIES
- A. Preformed Control Joints: Rubber material. Provide with corner and tee accessories, fused joints.
- B. Cavity Mortar Control: Semi-rigid polyethylene or polyester mesh panels, sized to thickness of wall cavity, and designed to prevent mortar droppings from clogging weeps and cavity vents and allow proper cavity drainage.
- C. Building Paper: ASTM D226/D226M, Type I ("No.15") asphalt felt.
- D. Weeps:
- E. Cavity Vents:
- F. Drainage Fabric: Polyester or polypropylene mesh bonded to a water and vapor-permeable fabric.

2.07 MORTAR AND GROUT MIXING
- A. Mortar for Unit Masonry: ASTM C270, using the Proportion Specification.
  1. Masonry below grade and in contact with earth: Type S.
  2. Exterior, loadbearing masonry: Type S.
  3. Exterior, non-loadbearing masonry: Type N.

PART 3 EXECUTION

3.01 COLD AND HOT WEATHER REQUIREMENTS
- A. Comply with requirements of TMS 402/602 or applicable building code, whichever is more stringent.
- B. All masonry shall be protected against freezing for not less than forty-eight (48) hours after installation and shall not be constructed below thirty-six degrees F.

3.02 COURSING
- A. Establish lines, levels, and coursing indicated. Protect from displacement.
- B. Maintain masonry courses to uniform dimension. Form vertical and horizontal joints of uniform thickness.
- C. Concrete Masonry Units:
- D. Brick Units:

3.03 PLACING AND BONDING
- A. Lay solid masonry units in full bed of mortar, with full head joints, uniformly jointed with other work.

3.04 WEEPS/CAVITY VENTS
- A. Install weeps in veneer and cavity walls at 24 inches (600 mm) on center horizontally on top of through-wall flashing above shelf angles and lintels and at bottom of walls.
- B. Install cavity vents in veneer and cavity walls at 32 inches (800 mm) on center horizontally below shelf angles and lintels and near top of walls.

3.05 CAVITY MORTAR CONTROL
- A. Do not permit mortar to drop or accumulate into cavity air space or to ` plug weep/cavity vents.

3.06 LINTELS
- A. Install loose steel lintels over openings.

END OF SECTION 042000

SECTION 042616 - ADHERED MASONRY VENEER

PART 1 GENERAL

1.01 SUBMITTALS
- A. Product Data: Provide data for thin brick units, mortar, grout, and adhesive.
- B. Samples: Submit four samples of thin brick units to illustrate color, texture, and extremes of color range.

1.02 FIELD CONDITIONS
- A. Cold and Hot Weather Requirements: Comply with requirements of TMS 402/602 or applicable building code, whichever is more stringent.

PART 2 PRODUCTS

2.01 MORTAR MATERIALS
- A. Masonry Cement: ASTM C91/C91M Type N.
  1. Colored mortar: Premixed cement as required to match Architect's color sample.
- B. Water: Clean and potable.

2.02 MORTAR MIXES
- A. Mortar for Unit Masonry: ASTM C270, Proportion Specification.
  1. Masonry below grade and in contact with earth: Type S.
  2. Exterior, non-loadbearing masonry: Type N.

2.03 FLASHINGS
- A. Metal Flashing Materials: Copper, see Section 076200.

2.04 LATH
- A. Diamond Mesh Metal Lath: ASTM C847, galvanized.
  1. Weight: 2.5 lb/sq yd (1.4 kg/sq m), minimum.
  2. Backed with treated paper.
- B. Beads, Screeds, Joint Accessories, and Other Trim: Depth governed by plaster thickness, maximum possible lengths.

2.05 ACCESSORIES

PART 3 EXECUTION

3.01 COURSING
- A. Establish lines, levels, and coursing indicated. Protect from displacement.
- B. Maintain masonry courses to uniform dimension. Form vertical and horizontal joints of uniform thickness.
- C. Brick Units:
  1. Bond: As indicated for different locations.
  2. Coursing: Three units and three mortar joints to equal 8 inches (200 mm).
  3. Mortar Joints: Concave.

3.02 PLACING AND BONDING

3.03 MASONRY FLASHINGS

END OF SECTION 042616

ZT ARCHITECTS LLC
240 WEST CRESCENT AVENUE
ALLENDALE, NJ 07401
TEL: 201.785.8855
www.zplusarchitects.com

PROJECT TEAM:

CIVIL
SCHWANEWEDE, HALS, & VINCE
111 LITTLETON RD #200
PARSIPPANY-TROY HILLS, NJ
201-337-0053

seal:

Michael Scro
NJ LIC# 18626

BALIWALA

10 BIRCH LANE, WALDWICK, NJ
City, State Zip

Copyright © 2019 , Z+ Architect, LLC

All dimensions and existing conditions shall be checked & verified by the contractor before proceeding with the work

REV	DATE	DESCRIPTION

SHEET TITLE:

SPECIFICATIONS

DESIGN DELIVERABLE: PERMIT SET

ISSUE DATE: 06/23/25

PROJECT #: 2508

DRAWN BY: AR

CHECKED BY: MS

SHEET NUMBER:

G-1

REVIT 2020

SECTION 047300 - MANUFACTURED STONE MASONRY

PART 1 GENERAL

1.01 SUBMITTALS

A. Product Data: Provide data for AMSMV units, lightweight synthetic stone veneer, mortar, lath, and water-resistive barrier, including:
1. Preparation instructions and recommendations.
2. Installation methods.
B. Verification Samples: For each finish product specified, two samples, minimum size 12 inches (305 mm) square, representing actual product, color, patterns and texture.

1.02 QUALITY ASSURANCE

A. Manufacturer Qualifications: Company specializing in manufacturing the types of products specified in this section, with minimum ten years of documented experience.

1.03 WARRANTY

A. See Section 017800 - Closeout Submittals, for additional warranty requirements.
B. Correct defective work within a five-year period after Date of Substantial Completion.
C. Provide 50-year manufacturer warranty for AMSMV.

PART 2 PRODUCTS

2.01 MANUFACTURERS

A. Adhered Manufactured Stone Masonry Veneer (AMSMV):

2.02 ADHERED MANUFACTURED STONE MASONRY VENEER (AMSMV)

A. AMSMV: Cast masonry units using a mixture of cement, lightweight aggregates, concrete additives and color pigments to replicate appearance of natural stone and designed to be applied with a cementitious mortar to a backing surface, complying with ASTM C1670/C1670M and ICC-ES AC51.
1. Style: As indicated on drawings.
2. Color, Texture, Range, Special Shapes: As indicated on drawings.

2.03 MORTAR APPLICATIONS

A. Scratch Coat Mortars: Scratch coat mortars for application directly to metal lath.
1. Prepackaged/Preblended: ASTM C1714/C1714M, Type S.
B. Setting Bed Mortars: Setting bed used to adhere AMSMV units to scratch coat mortar or to bondable concrete or concrete masonry.
1. Prepackaged/Preblended: ASTM C1714/C1714M, Type S.
C. Pointing Mortars: Pointing or grouting mortars used to fill the joints between individual AMSMV units once the setting bed mortar has sufficiently cured.
1. Prepackaged/Preblended: ASTM C1714/C1714M, Type N or Type S.

2.04 MORTAR MIXES

A. Packaged Dry Material for Mortar for Unit Masonry: Premixed masonry cement and mason's sand; complying with ASTM C1714/C1714M and capable of producing mortar of the specified strength in accordance with ASTM C270 with the addition of water only.
1. Type: Type S.
2. Color: Standard gray.

2.05 ACCESSORIES

A. Metal Lath with Rainscreen Drainage Material: Factory-assembled combination of mesh drainage material and metal lath.
B. Casing Beads, Weep Screeds, and Joint Accessories: As specified in Section 092236.
C. Water-Resistive Barrier: ASTM D226/D226M or ASTM E2556/E2556M.

PART 3 EXECUTION

3.01 INSTALLATION - WATER-RESISTIVE BARRIER

3.02 INSTALLATION - SCRATCH COAT

A. Apply mortar scratch coat of 1/2 inch (12.5 mm) nominal to cover metal lath in accordance with ASTM C926. Scratch surface when somewhat firm. If scratch coat dries before applying setting bed mortar and AMSMV, moisten scratch coat by misting it with water.

3.03 INSTALLATION - AMSMV

A. Install AMSMV with a cementitious mortar setting bed to a scratch coat backing surface, in accordance with AMSMV manufacturer's instructions, MVMA (AMSV), NCMA TEK 20-01, ASTM C1780 and ICC-ES AC51.

3.04 INSTALLATION - MASONRY FLASHINGS

A. Whether or not specifically indicated, install masonry flashing to divert water to exterior at all locations where downward flow of water will be interrupted.

END OF SECTION 047300

SECTION 051200 - STRUCTURAL STEEL FRAMING

PART 1 GENERAL

1.01 SUBMITTALS

A. Shop Drawings:
1. Indicate profiles, sizes, spacing, locations of structural members, openings, attachments, and fasteners.
2. Connections.
3. Indicate loads.
4. Indicate welded connections with AWS A2.4 welding symbols. Indicate net weld lengths.
B. Designer's Qualification Statement.
C. Fabricator's Qualification Statement.

1.02 QUALITY ASSURANCE

A. Fabricate structural steel members in accordance with AISC (MAN) "Steel Construction Manual."
B. Structural steel members designated as architecturally-exposed structural steel (AESS) to also comply with Section 051213.

PART 2 PRODUCTS

2.01 MATERIALS

A. Steel Angles and Plates: ASTM A36/A36M.
B. Steel W Shapes and Tees: ASTM A992/A992M.
C. Cold-Formed Structural Tubing: ASTM A500/A500M, Grade B.
D. Pipe: ASTM A53/A53M, Grade B, Finish black.
E. Structural Bolts and Nuts: Carbon steel, ASTM A307, Grade A and galvanized in compliance with ASTM A153/A153M Class C.
F. Grout: ASTM C1107/C1107M; Non-shrink; premixed compound consisting of non-metallic aggregate, cement, water reducing and plasticizing agents.
G. Shop and Touch-Up Primer: Fabricator's standard, complying with VOC limitations of authorities having jurisdiction.

2.02 FABRICATION

A. Shop fabricate to greatest extent possible.
B. Continuously seal joined members by continuous welds. Grind exposed welds smooth.
C. Fabricate connections for bolt, nut, and washer connectors.

2.03 FINISH

A. Shop prime structural steel members. Do not prime surfaces that will be fireproofed, field welded, in contact with concrete, or high strength bolted.

PART 3 EXECUTION

3.01 ERECTION

A. Erect structural steel in compliance with AISC 303.

END OF SECTION 051200

SECTION 061000 - ROUGH CARPENTRY

PART 1 GENERAL

1.01 SUBMITTALS

A. Product Data: Provide technical data on wood preservative materials and application instructions.
1.02 Per National Design Specifications for wood construction by NFPA

PART 2 PRODUCTS

2.01 GENERAL REQUIREMENTS

A. Dimension Lumber: Comply with PS 20 and requirements of specified grading agencies.
1. Species: Douglas Fir-Larch, unless otherwise indicated.
2. If no species is specified, provide species graded by the agency specified; if no grading agency is specified, provide lumber graded by grading agency meeting the specified requirements.
3. Grading Agency: Grading agency whose rules are approved by the Board of Review, American Lumber Standard Committee at www.alsc.org, and who provides grading service for the species and grade specified; provide lumber stamped with grade mark unless otherwise indicated.
B. Provide sustainably harvested wood; see Section 016000 - Product Requirements for requirements.

2.02 DIMENSION LUMBER FOR CONCEALED APPLICATIONS

A. Grading Agency: Northeastern Lumber Manufacturers Association; NELMA (SGR).
B. Sizes: Nominal sizes as indicated on drawings, S4S.
C. Moisture Content: S-dry or MC19.
D. Stud Framing (2 by 2 through 2 by 6 (50 by 50 mm through 50 by 150 mm)):
1. Grade: No. 1.
E. Joist, Rafter, and Small Beam Framing (2 by 6 through 4 by 16 (50 by 150 mm through 100 by 400 mm)):
1. Machine stress-rated (MSR) as follows:
a. Fb-single; minimum extreme fiber stress in bending: 1350 psi (9,300 kPa).
b. E; minimum modulus of elasticity: 1,900,000 psi (13,100 MPa).
2. Species: Douglas Fir-Larch.
F. Miscellaneous Framing, Blocking, Nailers, Grounds, and Furring:
1. Lumber: S4S, No. 1 or Construction Grade.
2. Boards: Standard or No. 3.

2.03 TIMBERS FOR CONCEALED APPLICATIONS

A. Sizes: Nominal sizes as indicated on drawings, S4S.
B. Moisture Content: S-dry (23 percent maximum).
C. Beams and Posts 5 inches (125 mm) and over in thickness:
1. Grade: Select Structural.

2.04 STRUCTURAL COMPOSITE LUMBER

A. Structural Composite Lumber: Factory fabricated beams, headers, and columns, of sizes and types indicated on drawings; structural capacity as published by manufacturer.
1. Columns: Use laminated veneer lumber, laminated strand lumber, or parallel strand lumber with manufacturer's published modulus of elasticity, E: 1,800,000 psi (12,410 MPa), minimum.
2. Beams: Use laminated veneer lumber, laminated strand lumber, or parallel strand lumber with manufacturer's published modulus of elasticity, E: 1,800,000 psi (12,410 MPa), minimum.
3. Headers Not Longer Than 48 inches (1220 mm): Use laminated veneer lumber, laminated strand lumber, or parallel strand lumber.

2.05 EXPOSED BOARDS

A. Submit manufacturer's certificate that products meet or exceed specified requirements, in lieu of grade stamping.
B. Moisture Content: Kiln-dry (15 percent maximum).
C. Surfacing: S4S.
D. Species: Douglas Fir Larch.
E. Grade: No. 2, 2 Common, or Construction.

2.06 CONSTRUCTION PANELS

A. Subfloor/Underlayment Combination: 3/4" PS 2 type, rated Single Floor.
` 1. Bond Classification: Exterior.
2. Span Rating: 48.
3. Performance Category: 1-1/8 PERF CAT.
4. Edges: Tongue and groove. - glued & screwed
B. Subflooring: 3/4" PS 2 type, rated Sheathing.
1. Bond Classification: Exterior.
2. Span Rating: 48.
3. Performance Category: 3/4 PERF CAT.
4. Edges: Tongue and groove - glued & screwed
C. Underlayment: APA Underlayment; plywood, Exterior exposure class, 1/2 inch (12.5 mm) thick. Fully sanded faces at resilient flooring.
D. Roof Sheathing: 5/8" PS 2 type, rated Structural I Sheathing.
1. Bond Classification: Exterior.
2. Span Rating: 60.
3. Performance Category: 3/4 PERF CAT.
E. Wall Sheathing: 1/2" PS 2 type.
1. Bond Classification: Exterior.
2. Grade: Structural I Sheathing.
3. Span Rating: 24.
4. Performance Category: 1/2 PERF CAT.
5. Edge Profile: Square edge.
F. Wall Sheathing: Plywood, PS 1, Grade C-C, Exterior Exposure.
G. Communications and Electrical Room Mounting Boards: PS 1 A-D plywood, or medium density fiberboard; 3/4 inch (19 mm) thick; flame spread index of 25 or less, smoke developed index of 450 or less, when tested in accordance with ASTM E84.

2.07 ACCESSORIES
A. Fasteners and Anchors:
1. Metal and Finish: Hot-dipped galvanized steel complying with ASTM A153/A153M for high humidity and preservative-treated wood locations, unfinished steel elsewhere.
B. Joist Hangers: Hot dipped galvanized steel, sized to suit framing conditions.
1. For contact with preservative treated wood in exposed locations, provide minimum G185 (Z550) galvanizing complying with ASTM A653/A653M.
C. Water-Resistive Barrier: Plastic sheet complying with ICC-ES AC38.
D. Termite Shield: Galvanized sheet steel,

2.08 FACTORY WOOD TREATMENT

A. Treated Lumber and Plywood: Comply with requirements of AWPA U1 - Use Category System for wood treatments determined by use categories, expected service conditions, and specific applications.
1. Fire-Retardant Treated Wood: Mark each piece of wood with producer's stamp indicating compliance with specified requirements.
B. All wood that comes in contact with concrete to be pressure treated & have continous sill sealer (full bed of mastic)

PART 3 EXECUTION

3.01 INSTALLATION - GENERAL

A. Select material sizes to minimize waste.
B. Where treated wood is used on interior, provide temporary ventilation during and immediately after installation sufficient to remove indoor air contaminants.

3.02 FRAMING INSTALLATION

A. Set structural members level, plumb, and true to line. Discard pieces with defects that would lower required strength or result in unacceptable appearance of exposed members.
B. Install structural members full length without splices unless otherwise specifically detailed.
C. Comply with member sizes, spacing, and configurations indicated, and fastener size and spacing indicated, but not less than required by applicable codes and AWC (WFCM) Wood Frame Construction Manual.
D. Install horizontal spanning members with crown edge up and not less than 1-1/2 inches (38 mm) of bearing at each end.
E. Connections: all connections shall be fabricated with approved timber connectors, bolts, lag screws, spikes and nails in accordance with accepted engineering practice. bolted connections shall be snugged up tightly without crushing wood fibers under the washers. All nailed connections shall meet the minimum requirements of the most current international building code, (NJ edition or state in which proejct in in)

END OF SECTION 061000

SECTION 061500 - WOOD DECKING

PART 1 GENERAL

1.01 SUBMITTALS

A. Shop Drawings: Indicate deck framing system, loads and cambers, bearing details, and framed openings.
B. Designer's Qualification Statement.

1.02 QUALITY ASSURANCE

A. Designer Qualifications: Perform design under direct supervision of a Professional Engineer experienced in design of this type of work and licensed in the State in which the Project is located.

PART 2 PRODUCTS

2.01 WOOD MATERIALS

A. Wood fabricated from old growth timber is not permitted.
B. Plywood Decking: PS 1 veneer plywood; APA Rated Sheathing, Span Rating ; Exterior grade;1 A interior veneer appearance grade; sanded.
C. Glued Laminated Decking: Softwood lumber of any species fabricated to comply with AITC A190.1 and AITC 113, laminated with adhesive tested according to ASTM D2559 for wet service; beveled edges, single tongue.
1. Appearance: Fabricate to AITC 110 Industrial grade.
2. After end trimming, seal with penetrating sealer.

2.02 ACCESSORIES

A. Fasteners and Anchors:
1. Fastener Type and Finish: Hot-dipped galvanized steel for high humidity and preservative-treated wood locations, unfinished steel elsewhere.

PART 3 EXECUTION

3.01 INSTALLATION - BOARD DECKING

A. Install decking perpendicular to framing members, with ends staggered over firm bearing. On sloped surfaces, lay decking with tongue upward.

END OF SECTION 061500

SECTION 06 16 13 – INSULATING SHEATHING (ZIP System R Sheathing)

PART 1 GENERAL

1.1 SUMMARY

A. Section includes insulating wall sheathing with integral water-resistive barrier and air barrier.

1.2 REFERENCES

A. Specifier: We have included this References Article in this short form specification for specifier information. If retaining this Article in your Project specification, edit it to correspond to references that remain in your edited Section text.
B. American Society of Mechanical Engineers (ASME): www.asme.org
1. ASME B18.6.1 - Wood Screws (Inch Series)
C. ASTM International (ASTM): www.astm.org
1. ASTM A153/A153M - Specification for Zinc Coating (Hot-Dip) on Iron and Steel Hardware
2. ASTM C1289 - Specification for Faced Rigid Cellular Polyisocyanurate Thermal Insulation Board
3. ASTM D779 - Test Method for Water Resistance of Paper, Paperboard, and Other Sheet Materials by the Dry Indicator Method
4. ASTM D1621 - Test Method for Compressive Properties Of Rigid Cellular Plastics
5. ASTM D2247 - Practice for Testing Water Resistance of Coatings in 100% Relative Humidity
6. ASTM E96/E 96M - Test Methods for Water Vapor Transmission of Materials
7. ASTM E331 - Test Method for Water Penetration of Exterior Windows, Skylights, Doors, and Curtain Walls by Uniform Static Air Pressure Difference
8. ASTM E2357 - Test Method for Determining Air Leakage of Air Barrier Assemblies
9. ASTM F1667 - Specification for Driven Fasteners: Nails, Spikes, and Staples
10. ASTM G154 - Practice for Operating Fluorescent Light Apparatus for UV Exposure of Nonmetallic Materials
D. US Department of Commerce (DOC): http://gsi.nist.gov/global/index.cfm/L1-5/l2-44/A-355
1. DOC PS 2 - Performance Standard for Wood-Based Structural Panels
E. International Code Council (ICC): www.iccsafe.org
1. ICC IBC - International Building Code
2. ICC IRC - International Residential Code for One and Two-Family Dwellings
F. ICC Evaluation Service, Inc. (ICC-ES): www.icc-es.org
1. ICC-ES AC12 - Acceptance Criteria For Foam Plastic Insulation
2. ICC-ES AC38 - Acceptance Criteria for Water-Resistive Barriers
3. ICC-ES AC116 - Acceptance Criteria for Nails and Spikes
4. ICC-ES AC148 - Acceptance Criteria For Flexible Flashing Materials
5. ICC-ES AC201 - Acceptance Criteria for Staples
6. ICC-ES AC269 - Acceptance Criteria for Racking Shear Evaluation of Proprietary Sheathing Materials attached to Light- Frame Wall Construction or Code-Complying Sheathing Attached to Light-Framed Walls with Proprietary Fasteners
7. ICC-ES AC310 - Acceptance Criteria for Water-Resistive Membranes Factory-bonded to Wood-based Structural Sheathing, Used as Water-Resistive Barriers
8. ICC-ES ESR-1539 - Power Driven Staples and Nails for Use in Engineered and Non-Engineered Connections
9. ICC-ES NER-272 - Power Driven Staples and Nails for Use in All Types of Building Construction
G. Sustainable Forestry Initiative (SFI): www.sfiprogram.org/
1. SFI 2010 - 2014 Standard

1.3 ACTION SUBMITTALS

A. Product Data: For each type of sheathing product specified.
B. Specifier: If required, retain "LEED Submittals" Paragraph below and edit to correspond to Project requirements.

1.4 INFORMATIONAL SUBMITTALS

A. Evaluation Reports: From ICC-ES, for wood sheathing and seam tape.
B. Product Certifications: From manufacturer, indicating that sheathing products comply with ICC-ES AC269 and ICC-ES AC310.
C. Certified Wood Certificates: Certificates indicating that manufacturer is currently certified by an SFI- or FSC- accredited certification body, and chain-of-custody certificates indicating that sheathing products comply with forest certification requirements.

1.5 CLOSEOUT SUBMITTALS

A. Warranty: Executed copy of manufacturer special warranties.

1.6 QUALITY ASSURANCE

A. Manufacturer Qualifications: Provide wood products from manufacturer certified by SFI, FSC, or comparable sustainable forestry program acceptable to Architect.
B. Provide wall sheathing products meeting requirements for water-resistive barrier in accordance with ICC-ES AC310.

C. Provide wall sheathing products meeting requirements of ICC-ES AC269.

1.7 DELIVERY, STORAGE, AND HANDLING

A. Comply with manufacturer's written instructions for protection of sheathing products from weather prior to installation.

1.8 WARRANTY

A. Special Manufacturer's Warranty: Manufacturer's standard form in which sheathing manufacturer agrees to repair or replace sheathing products that demonstrate deterioration or failure under normal use due to manufacturing defects within warranty period specified, when installed according to manufacturer's instructions.
1. Warranty Period for Sheathing Products: [30] years following date of Substantial Completion.
2. Warranty Conditions: Special warranties exclude deterioration or failure due to structural movement resulting in stresses on sheathing products exceeding manufacturer's written specifications, or due to air or moisture infiltration resulting from cladding failure or mechanical damage.

PART 2 - PRODUCTS

2.1 MANUFACTURERS
A. Basis-of-Design Product: Provide sheathing products manufactured by Huber Engineered Woods LLC, Charlotte NC; Phone: (800) 933-9220; Website: www.zipsystem.com.

2.2 PERFORMANCE REQUIREMENTS

A. Air-Barrier Assembly Air Leakage: Less than 0.04 cfm/sq. ft. at 1.57 lbf/sq. ft. (0.2 L/s x sq. m at 75 Pa), per ASTM E2375.
B. Water-Vapor Permeance, Facer: Minimum 12 perms (689 ng/Pa x s x sq. m), ASTM E96/E96M.
C. Weather Exposure: Manufacturer warranty applies for maximum allowable exposure period of 180 days.

2.3 MATERIALS

A. Certified Wood: Provide sheathing produced from wood obtained from forests certified by an accredited certification body.
B. Oriented Strand Board: DOC PS 2, made with binder containing no added urea formaldehyde.
C. Rigid Foam Plastic Insulating Board: Rigid polyisocyanurate foam core complying with ASTM C1289 Type II, Class 2, and ICC-ES AC12, with coated glass fiber facers on both sides, with the following characteristics:
1. Nominal Density: 2.0 pcf (32 kg/cu. m).
2. Compressive Strength, ASTM D1621: Not less than 20 psi (150 kPa).
3. Vapor Permeance, ASTM E96/E96M: Less than 1.0 perm.
4. Edge Configuration: Square finished.

2.4 COMPOSITE INSULATING WALL SHEATHING

A. Composite Insulating Wall Sheathing: Oriented-strand-board Exposure 1 sheathing 7/16 inch (11.1 mm) thick, with factory-laminated water-resistive barrier exterior facer, and with rigid foam plastic insulating board laminated to interior face.
1. Basis-of-Design Product: Provide **Huber Engineered Woods LLC; ZIP System R Sheathing**.
2. Span Rating and Performance Category of Sheathing Layer: Not less than 24/16; 7/16 Performance Category.
3. Thickness: 1-1/2 inch (38 mm).
4. Thermal Resistivity (R Value): 6.6 deg F x h x sq. ft./Btu x in. at 75 deg F ([25] [46] K x m/W at 24 deg C).
5. Edge Profile: Square edge.
6. Exterior Facer: Medium-density, phenolic-impregnated polymer-modified sheet material meeting requirements for ASTM D779 Grade D weather-resistive barrier in accordance with ICC AC38 and AC310, with fastener spacing symbols on exterior facer for 16-inch (406 mm) and 24-inch (610 mm) on center spacing, with the following characteristics
a. Water Resistance of Coatings, ASTM D2247: Pass 14 day exposure test.
b. Moisture Vapor Transmission, ASTM E96: Not less than 12 perms.
c. Water Penetration, ASTM E331: Pass at 2.86 lbf/sq. ft. (137 Pa).
d. Wind Driven Rain, TAS-100: Pass.
e. Accelerated Weathering, ASTM G154: Pass.

2.5 FASTENERS

A. Fasteners, General: Size and type complying with manufacturer's written instructions for Project conditions and requirements of authorities having jurisdiction.
1. Corrosion Resistance: Hot-dip zinc coating, ASTM A153/A 153M or Type 304 stainless steel.
B. Nails, Brads, and Staples: ICC AC116 and ICC AC201.
C. Power-Driven Fasteners: ICC-ES-1539 or NER-272.
D. Wood Screws: ASME B18.6.1.

2.6 SHEATHING JOINT-AND-PENETRATION TREATMENT MATERIAL
A. Self-Adhering Seam and Flashing Tape: Pressure-sensitive, self-adhering, cold-applied, seam tape consisting of polyolefin film with acrylic adhesive, meeting ICC AC148.
1. Basis-of-Design Product: Provide **Huber Engineered Woods; ZIP System Tape**.
2. Thickness: 0.012 inch (0.3 mm).

PART 3 - EXECUTION

3.1 EXAMINATION
A. Examine framing spacing and alignment to determine if work is ready to receive sheathing. Proceed with sheathing work once conditions meet requirements.

3.2 SHEATHING INSTALLATION

A. Install sheathing panels in accordance with manufacturer's written instructions, requirements of applicable Evaluation Reports, and requirements of authorities having jurisdiction.
B. Air and Moisture Barrier: Coordinate sheathing installation with flashing and joint sealant installation and with adjacent building air and moisture barrier components to provide complete, continuous air- and moisture-barrier.
C. Do not bridge expansion joints; allow joint spacing equal to spacing of structural supports.
D. Install panels with laminated facer to exterior. Stagger end joints of adjacent panel runs.
E. Attach sheathing panels securely to substrate with manufacturer-approved fasteners in compliance with the following:
1. ICC-ES ESR-1539 or ICC-NES NER-272 for power-driven fasteners.
2. IBC: Table 2304.9.1 Fastening Schedule.
3. IRC: Table R602.3(1), "Fastener Schedule for Structural Members," and Table R602.3(2), "Alternate Attachments."
F. Apply seam tape at all panel seams, penetrations, and facer defects or cracks to form continuous weathertight surface. Apply tape according to manufacturer's written instructions and requirements of ICC-ES applicable to tape application.

3.3 END OF SECTION 06 16 13

SECTION 061733 - WOOD I-JOISTS

PART 1 GENERAL

1.01 SECTION INCLUDES

A. Wood I-joists for roof and floor framing.
B. Bridging, bracing, and anchorage.
C. Framing for openings.

1.02 RELATED REQUIREMENTS

A. Section 061000 - Rough Carpentry: Installation requirements for miscellaneous framing.
B. Section 061000 - Rough Carpentry: Material requirements for blocking, plates, and miscellaneous framing.

1.03 REFERENCE STANDARDS

A. ASTM D5055 - Standard Specification for Establishing and Monitoring Structural Capacities of Prefabricated Wood I-Joists 2019, with Editorial Revision (2020).
B. PS 1 - Structural Plywood 2009 (Revised 2019).

1.04 SUBMITTALS

A. See Section 013000 - Administrative Requirements, for submittal procedures.
B. Product Data: Manufacturer's literature describing materials, dimensions, allowable spans and spacings, bearing and anchor details, bridging and bracing requirements, and installation instructions; identify independent inspection agency.
C. Shop Drawings: Indicate sizes and spacing of joists, bracing and bridging, bearing stiffeners, holes to be cut (if any), and framed openings between joists.
D. Certificate: Certification by joist manufacturer that products delivered are of the same design and construction as those evaluated by the independent inspection agency.

1.05 DELIVERY, STORAGE, AND HANDLING

A. Deliver products to site in manufacturer's original packaging with manufacturer's name and product identification intact and legible.
B. Protect products from damage due to weather and breakage.
C. Protect joists from warping or other distortion by stacking in upright position, braced to resist movement, with air circulation under coverings and around stacks.
D. Handle individual joists in the upright position.

PART 2 PRODUCTS
2.01 MANUFACTURERS
A. Wood I-Joists:
1. Boise Cascade Company: www.bc.com/#sle.
2. Louisiana-Pacific Corporation: www.lpcorp.com/#sle.
3. Weyerhaeuser Company: www.weyerhaeuser.com/#sle.
4. Substitutions: See Section 016000 - Product Requirements.

2.02 MATERIALS
A. Wood I-Joists: Solid lumber top and bottom flanges and [_____] webs bonded together with structural adhesive, with published span rating to meet project requirements.
1. Span Rating: Established and monitored in accordance with ASTM D5055 by independent inspection agency.
2. Plywood: Comply with PS 1.
3. Adhesive: Tested for wet/exterior service in accordance with ASTM D2559.
4. Fabrication Tolerances:
a. Flange Width: Plus/minus 1/32 inch (0.8 mm).
b. Flange Thickness: Minus 1/16 inch (1.6 mm).
c. Joist Depth: Plus 0, minus 1/8 inch (3.2 mm).
5. Marking: Mark each piece with depth, joist spacing, and allowable span for joist spacing.
B. Wood-Based Components:
1. Wood fabricated from old growth timber is not permitted.

C. Joist Bridging: Type, size and spacing recommended by joist manufacturer.
D. Wood Blocking, Plates, and Miscellaneous Framing: Softwood lumber, any species, construction grade, maximum moisture content of 19 percent.
E. Wood Blocking, Plates, and Miscellaneous Framing: As specified in Section 061000.
F. Fasteners: Electrogalvanized steel, type to suit application.

PART 3 EXECUTION

3.01 EXAMINATION

A. Verify that supports and openings are ready to receive joists.
B. Verify that field measurements are as indicated on shop drawings.

3.02 ERECTION

A. Install joists in accordance with manufacturer's instructions.
B. Set structural members level and plumb, in correct position.
C. Make provisions for erection loads and for sufficient temporary bracing to maintain structure plumb and in true alignment until completion of erection and installation of permanent bracing.
D. Install permanent bridging and bracing.
E. Install headers and supports to frame openings required.

END OF SECTION 061733

ZIP ARCHITECTS LLC
240 WEST CRESCENT AVENUE
ALLENDALE, NJ 07401
TEL: 201.785.8855
www.zipuararchitects.com

PROJECT TEAM:

CIVIL
SCHWANEWEDE, HALS, & VINCE
111 LITTLETON RD #200
PARSIPPANY-TROY HILLS, NJ
201-337-0053

seal:

Michael Scro
NJ LIC# 18626

BALIWALA

10 BIRCH LANE, WALDWICK, NJ
City, State Zip

Copyright © 2019 , Z+ Architect, LLC

All dimensions and existing conditions shall be checked & verified by the contractor before proceeding with the work.

REV	DATE	DESCRIPTION

SHEET TITLE:

SPECIFICATIONS

DESIGN DELIVERABLE: PERMIT SET

ISSUE DATE: 06/23/25

PROJECT #: 2508

DRAWN BY: AR

CHECKED BY: MS

SHEET NUMBER: G-2

REVIT 2020

SECTION 061753 - SHOP-FABRICATED WOOD TRUSSES

PART 1 GENERAL

1.01 SECTION INCLUDES

A. Shop fabricated wood trusses for roof and floor framing.
B. Bridging, bracing, and anchorage.
C. Preservative treatment of wood.

1.02 RELATED REQUIREMENTS

A. Section 016116 - Volatile Organic Compound (VOC) Content Restrictions.
B. Section 061000 - Rough Carpentry: Installation requirements for miscellaneous framing.
C. Section 061000 - Rough Carpentry: Material requirements for blocking, bridging, plates, and miscellaneous framing.

1.03 REFERENCE STANDARDS

A. ANSI/TPI 1 - National Design Standard for Metal-Plate-Connected Wood Truss Construction 2014.
B. ASTM A653/A653M - Standard Specification for Steel Sheet, Zinc-Coated (Galvanized) or Zinc-Iron Alloy-Coated (Galvannealed) by the Hot-Dip Process 2020.
C. AWPA U1 - Use Category System: User Specification for Treated Wood 2018.
D. SPIB (GR) - Grading Rules 2014.
E. TPI BCSI 1 - Building Component Safety Information Booklet: The Guide to Good Practice for Handling, Installing & Bracing of Metal Plate Connected Wood Trusses 2018.
F. TPI DSB-89 - Recommended Design Specification for Temporary Bracing of Metal Plate Connected Wood Trusses 1989.
G. WWPA G-5 - Western Lumber Grading Rules 2017.

1.04 SUBMITTALS

A. See Section 013000 - Administrative Requirements, for submittal procedures.
B. Product Data: Manufacturer's data sheets on plate connectors, bearing plates, and metal bracing components.
C. Shop Drawings: Show truss configurations, sizes, spacing, size and type of plate connectors, cambers, framed openings, bearing and anchor details, and bridging and bracing.
   1. Include identification of engineering software used for design.
   2. Provide shop drawings stamped or sealed by design engineer.
   3. Submit design calculations.
D. Designer's Qualification Statement.
E. Fabricator's Qualification Statement.

1.05 QUALITY ASSURANCE

A. Designer Qualifications: Perform design by or under direct supervision of a Professional Structural Engineer experienced in design of this Work and licensed in the State in which the Project is located.
B. Fabricator Qualifications: Company specializing in manufacturing the products specified in this section with minimum three years of documented experience.

1.06 DELIVERY, STORAGE, AND HANDLING

A. Handle and erect trusses in accordance with TPI BCSI 1.
B. Store trusses in vertical position resting on bearing ends.

PART 2 PRODUCTS

2.01 TRUSSES

A. Wood Trusses: Designed and fabricated in accordance with ANSI/TPI 1 and TPI DSB-89 to achieve structural requirements indicated.

2.02 MATERIALS

A. Lumber:
   1. Moisture Content: Between 7 and 9 percent.
   2. Lumber fabricated from old growth timber is not permitted.
B. Steel Connectors: Hot-dipped galvanized steel sheet, ASTM A653/A653M Structural Steel (SS) Grade 33/230, with G90/Z275 coating; die stamped with integral teeth; thickness as indicated.
C. Truss Bridging: Type, size and spacing recommended by truss manufacturer.

2.03 ACCESSORIES

A. Wood Blocking, Bridging, Plates, and Miscellaneous Framing: As specified in Section 061000.
B. Fasteners: Electrogalvanized steel, type to suit application.
C. Bearing Plates: Electrogalvanized steel.

2.04 WOOD TREATMENT

A. Treated Lumber and Plywood: Comply with requirements of AWPA U1 - Use Category System for wood treatments determined by use categories, expected service conditions, and specific applications.
B. Preservative Pressure Treatment of Lumber: AWPA U1, Use Category UC3B, Commodity Specification A using waterborne preservative to 0.25 lb/cu ft retention (to 4.0 kg/cu m retention).
   1. Kiln dry after treatment to maximum moisture content of 19 percent.

PART 3 EXECUTION

3.01 EXAMINATION

A. Verify that field measurements are as indicated.
B. Verify that supports and openings are ready to receive trusses.

3.02 ERECTION

A. Install trusses in accordance with manufacturer's instructions and TPI DSB-89 and TPI BCSI 1; maintain a copy of each TPI document on site until installation is complete.
B. Set members level and plumb, in correct position.
C. Make provisions for erection loads, and for sufficient temporary bracing to maintain structure plumb, and in true alignment until completion of erection and installation of permanent bracing.
D. Do not field cut or alter structural members without approval of Architect.
E. Install permanent bridging and bracing.
F. Install headers and supports to frame openings required.
G. Frame openings between trusses with lumber in accordance with Section 061000.

3.03 TOLERANCES

A. Framing Members: 1/2 inch (12 mm) maximum, from true position.

END OF SECTION 061753

SECTION 061800 - GLUED-LAMINATED CONSTRUCTION

PART 1 GENERAL

1.01 SUBMITTALS

A. Shop Drawings: Indicate framing system, sizes and spacing of members, loads and cambers, bearing and anchor details, bridging and bracing, framed openings , and all relative information shown on structural drawings need to be reflected on shop drawings.
B. Designer's Qualification Statement.

1.02 QUALITY ASSURANCE

A. Designer Qualifications: Design structural members under direct supervision of a Professional Structural Engineer experienced in design of this work and licensed in the State in which the Project is located.

PART 2 PRODUCTS

2.01 MATERIALS

A. Lumber: Softwood lumber complying with RIS (GR) grading rules with 12 percent maximum moisture content before fabrication. Design for the values as shown on the structural drawings.
B. Steel Connections and Brackets: ASTM A36/A36M weldable quality, galvanize per ASTM A123/A123M.
C. Anchor Bolts: ASTM F3125/F3125M, Type 1 heavy hex high strength bolts and ASTM A563 (ASTM A563M) nuts; hot-dip galvanized to meet requirements of ASTM A153/A153M, matching washers.
D. Bearing Plate Anchors: Expansion shield and lag bolt type for anchorage to solid masonry or concrete.

2.02 WOOD TREATMENT

A. Factory-Treated Lumber: Comply with requirements of AWPA U1 - Use Category System for pressure impregnated wood treatments determined by use categories, expected service conditions, and specific applications.

2.03 FABRICATION

A. Fabricate glue laminated structural members in accordance with AITC Industrial grade.
B. Cut and fit members accurately to length to achieve tight joint fit.
C. Do not splice or join members in locations other than those indicated without permission.

PART 3 EXECUTION

3.01 ERECTION

A. Lift members using protective straps to prevent visible damage.
B. Set structural members level and plumb, in correct positions or sloped where indicated.

END OF SECTION 061800

SECTION 062000 - FINISH CARPENTRY

PART 1 GENERAL

1.01 SUBMITTALS

A. Shop Drawings: Indicate materials, component profiles, fastening methods, jointing details, and accessories.
B. Samples: Submit two samples of wood trim [4"] inch ([____] mm) long.
C. Samples: Submit two samples of Cap, Base, and Column Shaft, one-quarter full size, illustrating one-quarter finish and construction.

1.02 QUALITY ASSURANCE

A. Quality Certification:

PART 2 PRODUCTS

2.01 FINISH CARPENTRY ITEMS

A. Quality Standard: Custom Grade, in accordance with AWI/AWMAC/WI (AWS) or AWMAC/WI (NAAWS), unless noted otherwise.

2.02 WOOD-BASED COMPONENTS

A. Provide sustainably harvested wood, certified or labeled as specified in Section 016000 - Product Requirements.

2.03 LUMBER MATERIALS

A. Softwood Lumber: as indicated on construction drawings species, plain sawn, maximum moisture content of 6 percent; with vertical grain, of quality suitable for transparent finish.
B. Hardwood Lumber: as indicated on construction drawings species, plain sawn, maximum moisture content of 6 percent ; with vertical grain , of quality suitable for transparent finish.

2.04 SHEET MATERIALS

A. Softwood Plywood, Not Exposed to View: Any face species, medium density fiberboard core; PS 1 Grade A-B, glue type as recommended for application.
B. Softwood Plywood, Exposed to View: Face species as indicated, plain sawn, medium density fiberboard core; PS 1 Grade A-B, glue type as recommended for application.
C. Hardwood Plywood: Face species as indicated, plain sawn, book matched, medium density fiberboard core; HPVA HP-1 Front Face Grade AA, Back Face Grade 1, glue type as recommended for application.

2.05 ACCESSORIES

A. Adhesive: Type recommended by fabricator to suit application.
B. Safety Glass: ASTM C1048, fully tempered; clear; 1/8 inch (3 mm) thick, minimum.
C. Wood Filler: Solvent base, tinted to match surface finish color.

2.06 WOOD TREATMENT

A. Factory-Treated Lumber: Comply with requirements of AWPA U1 - Use Category System for pressure impregnated wood treatments determined by use categories, expected service conditions, and specific applications.

2.07 FABRICATION

A. Shop assemble work for delivery to site, permitting passage through building openings.

2.08 SHOP FINISHING

A. Sand work smooth and set exposed nails and screws.
B. Apply wood filler in exposed nail and screw indentations.
C. Finish work in accordance with AWI/AWMAC/WI (AWS) or AWMAC/WI (NAAWS), Section 5 - Finishing for grade specified and as follows:

PART 3 EXECUTION

3.01 INSTALLATION

A. Install custom fabrications in accordance with AWI/AWMAC/WI (AWS) or AWMAC/WI (NAAWS) requirements for grade indicated.
B. Set and secure materials and components in place, plumb and level.
C. Carefully scribe work abutting other components, with maximum gaps of 1/32 inch (0.79 mm). Do not use additional overlay trim to conceal larger gaps.

END OF SECTION 062000

SECTION 071200 - BUILT-UP BITUMINOUS WATERPROOFING

PART 1 GENERAL

1.01 SUBMITTALS

A. Product Data: Provide properties of primer, bitumen, mastics, and characteristics of reinforcement fabric.
B. Shop Drawings: Indicate flashings, control joints and expansion joints, sealing at openings, projections, penetrations, and reglets, and waterproofing of holes, slots, and sleeves.
C. Warranty: Submit manufacturer warranty and ensure forms have been completed in Owner's name and registered with manufacturer.

1.02 QUALITY ASSURANCE

1.03 FIELD CONDITIONS

A. Maintain ambient temperatures above 40 degrees F (5 degrees C) for 24 hours before and during application until membrane has cured.

1.04 WARRANTY

A. Provide five-year manufacturer warranty against failure of waterproofing to resist penetration of water, except where such failures are the result of structural failures of building.

PART 2 PRODUCTS

2.01 WATERPROOFING APPLICATIONS

A. Foundation Walls: Three plies of hot asphaltic waterproofing, glass fiber reinforcing fabric.

2.02 HOT ASPHALTIC MATERIALS

A. Asphalt: ASTM D449/D449M, Type I.
B. Asphalt Primer: ASTM D41/D41M, compatible with substrate.
C. Sealing Mastic: Asphalt roof cement, ASTM D4586/D4586M, Type I, asbestos free.

2.03 COLD ASPHALTIC MATERIALS

A. Asphalt Primer: ASTM D41/D41M, compatible with substrate.
B. Reinforcing Fabric: Glass fiber, ASTM D1668/D1668M, Type I, woven, asphalt treated.

2.04 ACCESSORIES

A. Protection Board: 1/2-inch (12.7-mm) thick biodegradable hardboard; with integral drainage channels.
B. Drainage Panel: 3/8-inch (9.5-mm) thick formed plastic, and embossed with cover sheet.
C. Cant Strips: Premolded composition material.

PART 3 EXECUTION

3.01 WATERPROOFING INSTALLATION

A. Install waterproofing in compliance with NRCA (WM) and applicable requirements.

3.02 PROTECTION BOARD AND DRAINAGE PANEL INSTALLATION

A. Place drainage panel directly against membrane; butt joints; position to direct drainage downward.
B. Place protection board directly against drainage panel; butt joints.

END OF SECTION 071200

SECTION 071300 - SHEET WATERPROOFING

PART 1 GENERAL

1.01 SUBMITTALS

A. Product Data: Provide data for membrane.
B. Manufacturer's Qualification Statement.
C. Warranty: Submit manufacturer warranty and ensure forms have been completed in Owner's name and registered with manufacturer.

1.02 QUALITY ASSURANCE

1.03 WARRANTY

PART 2 PRODUCTS

2.01 WATERPROOFING APPLICATIONS

A. Self-Adhered Modified Bituminous Sheet Membrane:
   1. Location: as indicated on construction drawings.
   2. Cover with protection board.
B. Self-Adhered HDPE Sheet Membrane:
   1. Location: as indicated on construction drawings.
C. Self-Adhered TPO Sheet Membrane:
   1. Location: as indicated on construction drawings.

2.02 MEMBRANE MATERIALS

A. Self-Adhered Modified Bituminous Sheet Membrane:
   1. Thickness: 60 mil, 0.060 inch (1.5 mm), minimum.
B. Self-Adhered HDPE Sheet Membrane: Recommended by manufacturer for placement below concrete slabs and on outside face of below grade walls before placement of concrete.
   1. Sheet Thickness: 32 mil, 0.032 inch (0.8 mm), minimum.
C. Self-Adhered TPO Sheet Membrane: Composite membrane formed of reinforced TPO sheet with butyl alloy adhesive layer; recommended by manufacturer for direct concrete contact in negative-side waterproofing applications.
   1. Total Sheet Thickness: 70 mil, 0.070 inch (1.77 mm), minimum.
   2. Adhesive Thickness: 0.025 inch (0.64 mm), minimum.

2.03 ACCESSORIES

A. Sealant for Cracks and Joints In Substrates: Resilient elastomeric joint sealant compatible with substrates and waterproofing materials.
B. Protection Board: Provide type capable of preventing damage to waterproofing due to backfilling and construction traffic.
   1. Semi-rigid glass fiber board; unaffected by water, freeze-thaw, fungus, or soil bacteria; containing no formaldehyde, phenol, acrylic, or artificial color; 3/4 inch (19 mm) thick, nominal.
C. Drainage Panel: Drainage layer with geotextile filter fabric on earth side.
   1. Composition: Dimpled polystyrene, polyethylene, or polypropylene core; polypropylene filter fabric.
D. Termination Bars: Aluminum; compatible with membrane and adhesives.
E. Adhesives: As recommended by membrane manufacturer.
F. Thinner and Cleaner: As recommended by adhesive manufacturer, compatible with sheet membrane.

PART 3 EXECUTION

3.01 INSTALLATION - MEMBRANE

A. Install membrane waterproofing in accordance with manufacturer's instructions and NRCA (WM) applicable requirements.
B. Overlap edges and ends, minimum 3 inches (76 mm), seal permanently waterproof by method recommended by manufacturer, and apply uniform bead of sealant to joint edge.

3.02 INSTALLATION - DRAINAGE PANEL and PROTECTION BOARD

A. Place drainage panel directly against membrane, butt joints, and position to encourage drainage downward; scribe and cut boards around projections, penetrations, and interruptions.

END OF SECTION 071300

SECTION 072100 - THERMAL INSULATION

PART 1 GENERAL

1.01 SUBMITTALS

A. Product Data: Provide data on product characteristics, performance criteria, and product limitations.

B. ABAA Field Quality Control Submittals: Submit third-party reports of testing and inspection required by ABAA QAP.

C. ABAA Manufacturer Qualification: Submit documentation of current evaluation of proposed manufacturer and materials.

D. ABAA Installer Qualification: Submit documentation of current contractor accreditation and current installer certification. Keep copies of contractor accreditation and installer certification on project site during and after installation. Present on-site documentation upon request.

PART 2 PRODUCTS

2.01 APPLICATIONS

A. Insulation Under Concrete Slabs: Extruded polystyrene (XPS) board.

B. Insulation at Perimeter of Foundation: Extruded polystyrene (XPS) board.

C. Insulation on Inside of Framed Walls with Exposed Facer Providing Interior Finish: Glass-fiber-reinforced polyisocyanurate with exposed facers.

D. Insulation in Wood Framed Walls: Batt insulation with separate vapor retarder.

E. Insulation in Wood Framed Ceiling Structure: Batt insulation with separate vapor retarder.

2.02 FOAM BOARD INSULATION MATERIALS

A. Extruded Polystyrene (XPS) Board Insulation: Complies with ASTM C578 with either natural skin or cut cell surfaces.
   1. Type and Compressive Resistance: Type IV, 25 psi (173 kPa), minimum.
   2. Flame Spread Index (FSI): Class A - 0 to 25, when tested in accordance with ASTM E84.
   3. Smoke Developed Index (SDI): 450 or less, when tested in accordance with ASTM E84.
   4. Type and Thermal Resistance, R-value (RSI-value): Type IV, 5.0 (0.88), minimum, per 1 inch (25.4 mm) thickness at 75 degrees F (24 degrees C) mean temperature.

B. Glass-Fiber-Reinforced Polyisocyanurate (ISO) Board Insulation with Facers Both Sides and Providing Interior Finish System: Rigid cellular foam, complying with ASTM C1289.
   1. Compressive Strength: 16 psi (110 kPa), minimum.
   2. Thermal Resistance, R-value (RSI-value): Type I, Class 2, at 1-1/2 inch (38.1 mm) thick; 9.0 (1.59), minimum, at 75 degrees F (24 degrees C).
   3. Flame Spread Index (FSI): Class A - 0 to 25, when tested in accordance with ASTM E84.
   4. Smoke Developed Index (SDI): 450 or less, when tested in accordance with ASTM E84.
   5. Board Size: 48 inch by 96 inch (1220 mm by 2440 mm).
   6. Board Thickness: 1 inch (25 mm).
   7. Board Edges: Square.
   8. Exposed Facer: 4 mil, 0.004 inch (0.1016 mm) embossed white thermoset-coated aluminum.
   9. Non-Exposed Facer: 1.25 mil, 0.00125 inch (0.03175 mm) embossed aluminum.

2.03 BATT INSULATION MATERIALS

A. Where batt insulation is indicated, either glass fiber or mineral fiber batt insulation may be used, at Contractor's option, unless pat of a UL rated assembly, follow as noted on construction documents.

B. Glass Fiber Batt Insulation: Flexible preformed batt or blanket, complying with ASTM C665; friction fit.
   1. Combustibility: Non-combustible, when tested in accordance with ASTM E136, except for facing, if any.
C. Mineral Fiber Batt Insulation: Flexible or semi-rigid preformed batt or blanket, complying with ASTM C665; friction fit; unfaced flame spread index of 0 (zero) when tested in accordance with ASTM E84.

   1. Smoke Developed Index: 0 (zero), when tested in accordance with ASTM E84.
   2. Thermal Resistance: R-value (RSI-value) of as indicated on drawings].

2.04 ACCESSORIES

A. Interior Vapor Retarder: Modified polyethylene/polyacrylate (PE/PA) film reinforced with polyethylene terephthalate (PET) fibers, 12 mil, 0.012 inch (0.30 mm) thick.
   1. Width: 4.9 feet (1.5 m).
B. Tape: Reinforced polyethylene film with acrylic pressure sensitive adhesive.
   1. Application: Sealing of interior circular penetrations, such as pipes or cables.
C. Flashing Tape: Special reinforced film with high performance adhesive.
   1. Application: Window and door opening flashing tape.

PART 3 EXECUTION

3.01 BOARD INSTALLATION AT FOUNDATION PERIMETER

A. Adhere a 6 inches (152 mm) wide strip of polyethylene sheet over construction, control, and expansion joints with double beads of adhesive each side of joint.

3.02 BOARD INSTALLATION UNDER CONCRETE SLABS

A. Place insulation under slabs on grade after base for slab has been compacted.

3.03 BATT INSTALLATION

A. Install insulation and vapor retarder in accordance with manufacturer's instructions.
B. Install in exterior wall and roof spaces without gaps or voids. Do not compress insulation.

END OF SECTION 072100

SECTION 072129 - SPRAYED INSULATION

PART 1 GENERAL

1.01 SUBMITTALS

A. Product Data: Provide data on materials, describing insulation properties.

PART 2 PRODUCTS

2.01 MATERIALS

A. Cellulosic Fiber Insulation: ASTM C739; treated cellulosic fiber, white color.
   1. Thermal Resistance (R-value (RSI-value)): 3.9 (0.67), at 1 inch (25.4 mm) thick when tested in accordance with ASTM C177 at 75 degrees F (23 degrees C) temperature
   2. Density: 2 lb/cu ft (32 kg/cu m), when tested in accordance with ASTM D1622.
   3. Noise Reduction Coefficient (NRC): 0.75 for 1 inch (25 mm) thickness.
   4. Moisture Absorption: Maximum 15 percent by weight.
   5. Flame Spread / Smoke Developed Index: 0-25 / 0-450, Class A, when tested in accordance with ASTM E84.
   6. Combustibility: Passing ASTM E136.

B. Provide blown insulation in accordance with requirements of Section 016116 - Volatile Organic Compound (VOC) Content Restrictions.
C. Thermal Resistance [R-value (RSI-value)]: Provided minimum values in accordance with applicable edition of ASHRAE Std 90.1 I-P for envelope requirements of building location and climate zone.

2.02 ACCESSORIES

A. Primer: As required by insulation manufacturer.
B. Surface Sealer: Clear, latex based for placement over insulation.
C. Roof Ventilation Baffles: Prefabricated ventilation channels for placement under roof sheathing with baffles to prevent wind-washing.

PART 3 EXECUTION

3.01 INSTALLATION

A. Install sprayed insulation in accordance with manufacturer's instructions.
B. Install sprayed insulation to a uniform monolithic density without voids.
C. Install to achieve a thermal resistance R-value of as indicated on construction drawings

END OF SECTION 072129

SECTION 072500 - WEATHER BARRIERS

PART 1 GENERAL

1.01 SUBMITTALS

A. Product Data: Provide data on material characteristics.

PART 2 PRODUCTS

2.01 WATER-RESISTIVE BARRIER MATERIALS

A. Plastic Sheet: Polymeric-based sheet complying with requirements of ICC-ES AC38, Grade D, with 60-minute water resistance; polyethylene sheet is not permitted.
   1. Water Resistance: Withstand hydrostatic head of 21 inches (55 cm), minimum, for at least five hours; pass test method in accordance with AATCC Test Method 127.
B. Water-Resistive Barrier, Composite: Tear-resistant polyester sheet with UV-resistant acrylic coating.
   1. Air Permeance: 0.18 cfm/sq ft (0.9 L/(s sq m)), maximum, when tested in accordance with ASTM E2178.
   2. Water Vapor Permeance: 200 perms (11,400 ng/(Pa s sq m)), minimum, when tested in accordance with ASTM E96/E96M using Procedure A - Desiccant Method, at 73.4 degrees F (23 degrees C).
   3. Ultraviolet (UV) and Weathering Resistance: Approved by manufacturer for up to 210 days of weather exposure.
   4. Surface Burning Characteristics: Flame spread index of 25 or less, smoke developed index of 450 or less, Class A when tested in accordance with ASTM E84.
   5. Seam and Perimeter Tape: As recommended by sheet manufacturer.

2.02 ACCESSORIES
A. Sealants, Tapes, and Accessories Used for Sealing Water-Resistive Barrier and Adjacent Substrates: As indicated or complying with water-resistive barrier manufacturer's installation instructions.
B. Flexible Flashing: Self-adhering or mechanically attached flashing used for wall penetrations in accordance with ICC-ES AC148 requirements.

SECTION 073113 - ASPHALT SHINGLES

PART 1 GENERAL

1.01 SUBMITTALS

A. Product Data: Provide data indicating material characteristics.
B. Shop Drawings: For metal flashings, indicate specially configured metal flashings.
C. Samples: Submit two samples of each shingle color indicating color range and finish texture/pattern; for color selection.

1.02 WARRANTY

A. See Section 017800 - Closeout Submittals for additional warranty requirements.
B. Correct defective Work within a five-year period after Date of Substantial Completion.
C. Provide lifetime manufacturer's warranty for coverage against black streaks caused by algae.
D. Provide five-year manufacturer's warranty for wind damage.

PART 2 PRODUCTS

2.01 MANUFACTURERS
A. Owens Corning
B. GAF - Timberline

2.02 ASPHALT SHINGLES

A. Asphalt Shingles: Asphalt-coated glass felt, mineral granule surfaced, complying with ASTM D3462/D3462M.
   1. Fire Resistance: Class A, complying with ASTM E108.
   2. Wind Resistance: Class F, when tested in accordance with ASTM D3161/D3161M.
   3. Wind Resistance (Uplift): Class G, when tested in accordance with ASTM D7158/D7158M.
   4. Warranted Wind Speed: Not greater than 150 mph (241 km/h).
   5. Algae Resistant.
   6. Style: as indicated on construction drawings.
   7. Color: As selected by Architect.

2.03 SHEET MATERIALS

A. Eave Protection Membrane:
   1. Eave Protection Membrane: Self-adhering polymer-modified asphalt sheet complying with ASTM D1970/D1970M; 40 mil (1 mm) total thickness; with strippable treated release paper and polyethylene sheet top surface.
   2. Eave Protection Membrane: Asphalt-coated organic roll roofing, with smooth asphalt coating both sides, complying with ASTM D6380/D6380M, Class S, Type IV, 39.8 lb/100 sq ft (1,943 g/sqm).

B. Underlayment: Self-adhering butyl-rubber sheet complying with ASTM D1970/D1970M; strippable release film.
C. Underlayment: Asphalt-saturated organic roofing felt, unperforated, complying with ASTM D226/D226M, Type II ("No.30").
D. Flexible Flashing: Self-adhering polymer-modified asphalt sheet complying with ASTM D1970/D1970M; 40 mil (1 mm) total thickness; with strippable treated release paper and polyethylene sheet top surface.

ZplusARCHITECTS LLC
240 WEST CRESCENT AVENUE
ALLENDALE, NJ 07401
TEL: 201.785.8855
www.zplusarchitects.com

PROJECT TEAM:

CIVIL
SCHWANEWEDE, HALS, & VINCE
111 LITTLETON RD #200
PARSIPPANY-TROY HILLS, NJ
201-337-0053

seal:

Michael Scro
NJ LIC# 18626

BALIWALA

10 BIRCH LANE, WALDWICK, NJ
City, State Zip

Copyright © 2019 , Z+ Architect, LLC

All dimensions and existing conditions shall be checked & verified by the contractor before proceeding with the work

REV	DATE	DESCRIPTION

SHEET TITLE:

SPECIFICATIONS

DESIGN DELIVERABLE: PERMIT SET

ISSUE DATE: 06/23/25

PROJECT #: 2508

DRAWN BY: AR

CHECKED BY: MS

SHEET NUMBER:

G-3

REVIT 2020

2.04 ACCESSORIES

A. Roofing Nails: Standard round wire shingle type, galvanized steel, stainless steel, aluminum roofing nails, or copper roofing nails, minimum 3/8 inch (9.5 mm) head diameter, 12 gauge, 0.109 inch (2.77 mm) nail shank diameter, 1-1/2 inch (38 mm) long and complying with ASTM F1667.

2.05 METAL FLASHINGS

A. Metal Flashings: Provide sheet metal eave edge, gable edge, ridge, ridge vents, open valley flashing, chimney flashing, dormer flashing, and other flashing indicated.

PART 3 EXECUTION

3.01 INSTALLATION - EAVE PROTECTION MEMBRANE
A. Install eave protection membrane from eave edge to minimum 4 ft (1200 mm) up-slope beyond interior face of exterior wall.

B. Install eave protection membrane in accordance with manufacturer's instructions and NRCA (RM) applicable requirements.

3.02 INSTALLATION - UNDERLAYMENT

3.03 INSTALLATION - VALLEY PROTECTION

A. At Exposed Valleys: Install one layer of sheet metal flashing, minimum 24 inches (600 mm) wide, centered over open valley and crimped to guide water flow, weather lap joints minimum 2 inch (50 mm) wide band of lap cement along each edge of first layer, press roll roofing into cement, nail in place minimum 18 inches (450 mm) on center and 1 inch (25 mm) from edges.

3.04 INSTALLATION - SHINGLES

A. Install shingles in accordance with manufacturer's instructions manufacturer's instructions and NRCA (RM) applicable requirements.

B. Place shingles in straight coursing pattern with 5 inch (125 mm) weather exposure to produce double thickness over full roof area, and provide double course of shingles at eaves.

END OF SECTION 073113

SECTION 074113 - METAL ROOF PANELS

PART 1 GENERAL

1.01 SUBMITTALS

A. Shop Drawings: Include layouts of roof panels, details of edge and penetration conditions, spacing and type of connections, flashings, underlayments, and special conditions.
B. Verification Samples: For each roofing system specified, submit samples of minimum size 12 inches (305 mm) square, representing actual roofing metal, thickness, profile, color, and texture.

1.02 WARRANTY

A. Finish Warranty: Provide manufacturer's special warranty covering failure of factory-applied exterior finish on metal roof panels and agreeing to repair or replace panels that show evidence of finish degradation, including significant fading, chalking, cracking, or peeling within specified warranty period of twenty years from Date of Substantial Completion.

PART 2 PRODUCTS

2.01 PERFORMANCE REQUIREMENTS

A. Metal Roof Panels: Provide complete roofing assemblies, including roof panels, clips, fasteners, connectors, and miscellaneous accessories, tested for compliance with the following minimum standards:
1. Structural Design Criteria: Provide panel assemblies designed to safely support design loads at support spacing indicated, with deflection not to exceed L/180 of span length(L) when tested in accordance with ASTM E1592.
2. Overall: Complete weathertight system tested and approved in accordance with ASTM E1592.
3. Wind Uplift: Class 90 wind uplift resistance of UL 580.
4. Air Infiltration: Maximum 0.06 cfm/sq ft (1.1 cubic meters/hr/sq m) at air pressure differential of 6.24 lbf/sq ft (300 Pa), when tested according to ASTM E1680.
5. Water Penetration: No water penetration when tested according to procedures and recommended test pressures of ASTM E1646. Perform test immediately following air infiltration test.
6. Thermal Movement: Design system to accommodate without deformation anticipated thermal movement over ambient temperature range of 100 degrees F (56 degrees C).

2.02 ARCHITECTURAL METAL ROOF PANELS

A. Architectural Metal Roof Panels: Provide complete engineered system complying with specified requirements and capable of remaining weathertight while withstanding anticipated movement of substrate and thermally induced movement of roofing system.
B. Architectural Metal Panels: Factory-formed panels with factory-applied finish.
1. Aluminum Panels:
a. Alloy and Temper: Aluminum complying with ASTM B209 (ASTM B209M); temper as required for forming.
b. Thickness: Minimum 20 gauge, 0.032 inch (0.81 mm).
2. Profile: Batten seam, with separate snap-on battens of same metal as panels; concealed fastener system or as indicated on construction drawings.
3. Texture: Smooth.
4. Width: Maximum panel coverage of 16 inches (406 mm).
C. Metal Soffit Panels:
1. Profile: Style as indicated, with venting provided.
2. Material: Precoated aluminum sheet, 20 gauge, 0.032 inch (0.81 mm) minimum thickness.
3. Color: As selected by Architect from manufacturer's standard line.

2.03 ATTACHMENT SYSTEM

A. Concealed System: Provide manufacturer's standard stainless steel or nylon-coated aluminum concealed anchor clips designed for specific roofing system and engineered to meet performance requirements, including anticipated thermal movement.

2.04 FINISHES

A. Fluoropolymer Coil Coating System: Manufacturer's standard multi-coat aluminum coil coating system complying with AAMA 2605, including at least 70 percent polyvinylidene fluoride (PVDF) resin, and at least 80 percent of coil coated aluminum surfaces having minimum total dry film thickness (DFT) of 0.9 mil, 0.0009 inch (0.023 mm); color and gloss to match sample.
B. Fluoropolymer Coil Coating System: Polyvinylidene fluoride (PVDF) multi-coat superior performing organic coatings system complying with AAMA 2605, including at least 70 percent PVDF resin, and at least 80 percent of coil coated aluminum surfaces having minimum total dry film thickness (DFT) of 0.9 mil, 0.0009 inch (0.023 mm); color and gloss as selected by Architect from manufacturer's standard line.

2.05 ACCESSORIES

A. Underlayment for Wood Substrate: ASTM D226/D226M roofing felt, perforated type; covered by water-resistant rosin-sized building paper.
B. Underlayment: Self-adhering rubber-modified asphalt sheet complying with ASTM D1970/D1970M; 22 mil (0.55 mm) total thickness; with strippable release film and woven polypropylene sheet top surface.

PART 3 EXECUTION

3.01 INSTALLATION

A. Overall: Install roofing system in accordance with approved shop drawings and panel manufacturer's instructions and recommendations, as applicable to specific project conditions. Anchor all components of roofing system securely in place while allowing for thermal and structural movement.
B. Accessories: Install all components required for a complete roofing assembly, including flashings, gutters, downspouts, trim, moldings, closure strips, preformed crickets, caps, equipment curbs, rib closures, ridge closures, and similar roof accessory items.

END OF SECTION 074113

SECTION 074623 - WOOD SIDING

PART 1 GENERAL

1.01 SUBMITTALS

A. Product Data: Provide manufacturer's data on materials, component profiles, fastening methods, jointing details, sizes, surface texture, finishes, and accessories; showing compliance with requirements, including:
B. Shop Drawings: Indicate dimensions, layout, joints, construction details, support clips, anchor details, and methods of anchorage.
C. Manufacturer's qualification statement.
D. Installer's qualification statement.

1.02 QUALITY ASSURANCE

PART 2 PRODUCTS

2.01 SIDING

A. Grade lumber in accordance with the following:
1. Western Red Cedar: WCLIB (GR).
2. Species indicated on construction drawings: Grading rules of SPIB (GR).
B. Plywood Specified by APA PRP-108 Grade or Type: Labeled by APA certified grading agency.

C. Board Siding: as indicated on construction drawings, cedar, maximum moisture content of 10 percent.
1. Surface Texture: Sanded.

D. Panel Siding: APA 303 Rated Siding 303-6-S/W, exterior exposure class, panel style.
1. Span Rating: 16 inches (406 mm) on center.
2. Texture/Pattern: APA 303 Texture 1-11.
3. Finish: as indicated on construction drawings.

E. Venting Batten/Furring Strips: Mold resistant non-absorptive composite material, with dual vertical and horizontal channels on front and back sides allowing for drainage and cross ventilation.
1. Width: 1-3/4 inch (44.5 mm).
2. Thickness: 3/8 inch (9.5 mm).
3. Length: 8 feet (2.44 m).
4. Color: Manufacturer's standard color.

2.02 ACCESSORIES

A. Cladding Support Clips: Thermally-broken, galvanized steel clips for support of cladding z-girts, angles, channels and other framing.
1. Galvanized Steel Sheet: ASTM A653/A653M, with G90/Z275 galvanized coating.
B. Wood Sealer: Factory-applied, water-based polymer, water repellant sealer that reacts chemically with untreated, natural wood surfaces.
C. Nails: Corrosion resistant type; non-staining, of size and strength to securely and rigidly retain the work; prefinished to match siding finish.
D. Flashing: Aluminum as specified in Section 076200.

PART 3 EXECUTION

3.01 INSTALLATION

A. Install siding, soffits, and batten strips in accordance with manufacturer's instructions.
B. Fasten siding in place, level and plumb.
C. Install board siding using single course method with exposure as indicated on construction drawings.

END OF SECTION 074623

SECTION 074646 - FIBER-CEMENT SIDING

PART 1 GENERAL

1.01 SUBMITTALS

A. Product Data: Submit manufacturer's data sheets on each product to be used, including:
1. Manufacturer's requirements for related materials to be installed by others.
2. Installation methods, including nail patterns.
B. Shop Drawings: Indicate dimensions, layout, joints, construction details, support clips, all miscellaneous trims, and methods of anchorage.

1.02 WARRANTY

A. See Section 017800 - Closeout Submittals for additional warranty requirements.

B. Correct defective work within a five-year period after Date of Substantial Completion.

PART 2 PRODUCTS

2.01 FIBER-CEMENT SIDING

A. Lap Siding: Individual horizontal boards made of cement and cellulose fiber formed under high pressure with integral surface texture, complying with ASTM C1186, Type A, Grade II; with machined edges, for nail attachment.
1. Style: as indicated on construction drawings.
2. Texture: as indicated on construction drawings.
3. Length: 12 ft (3.7 m), nominal.
4. Width (Height): as indicated on construction drawings.
5. Thickness: 5/16 inch (8 mm), nominal.
6. Finish: Factory applied topcoat.
7. Color: As indicated on drawings.
8. Warranty: 50 year limited; transferable.

B. Panel Siding: Vertically oriented panels made of cement and cellulose fiber formed under high pressure with integral surface texture, complying with ASTM C1186, Type A, Grade II; with machined edges, for nail attachment.
1. Length (Height): 96 inches (2400 mm), nominal.
2. Width: as indicated on construction drawings.
3. Thickness: 5/16 inch (8 mm), nominal.
4. Finish: Factory applied topcoat.
5. Color: As indicated on drawings.
6. Warranty: 50 year limited; transferable.

C. Soffit Panels: Panels made of cement and cellulose fiber formed under high pressure with integral surface texture, complying with ASTM C1186, Type A, Grade II; with machined edges, for nail attachment.
1. Texture: Smooth.
2. Length: 96 inches (2400 mm), nominal.
3. Width: 48 inches (1220 mm).
4. Thickness: 5/16 inch (8 mm), nominal.
5. Finish: Factory applied topcoat.
6. Color: As indicated on drawings.

PART 3 EXECUTION
3.01 INSTALLATION

A. Install in accordance with manufacturer's instructions and recommendations.
1. Read warranty and comply with terms necessary to maintain warranty coverage.

B. Over Wood and Wood-Composite Sheathing: Fasten siding through sheathing into studs.

C. Over Masonry Walls: Install furring strips of adequate thickness to accept full length of nails and spaced at 16 inches (406 mm) on center; leave space at top and bottom open; top may be behind soffit; at bottom install insect screen over opening by wrapping a strip of screen over bottom ends of vertical furring strips.

D. Do not install siding less than 6 inches (150 mm) from surface of ground nor closer than 1 inch (25 mm) to roofs, patios, porches, and other surfaces where water may collect.

END OF SECTION 074646

SECTION 076200 - SHEET METAL FLASHING AND TRIM

PART 1 GENERAL

1.01 SUBMITTALS

A. Shop Drawings: Indicate material profile, jointing pattern, jointing details, fastening methods, flashings, terminations, and installation details.

1.02 QUALITY ASSURANCE

A. Perform work in accordance with SMACNA (ASMM) and CDA A4050 requirements and standard details, except as otherwise indicated.

PART 2 PRODUCTS

2.01 MANUFACTURERS

A. Sheet Metal Flashing and Trim Manufacturers:

2.02 SHEET MATERIALS

A. Galvanized Steel: ASTM A653/A653M, with G90/Z275 zinc coating; minimum 24 gage, (0.0239 inch) (0.61 mm) thick base metal.
B. Pre-Finished Galvanized Steel: ASTM A653/A653M, with G90/Z275 zinc coating; minimum 24 gage, (0.0239) inch (0.61 mm) thick base metal, shop pre-coated with PVDF coating.
1. Modified Silicone Polyester Coating: Pigmented Organic Coating System, AAMA 2603; baked enamel finish system.
2. PVDF (Polyvinylidene Fluoride) Coating: Superior Performance Organic Finish, AAMA 2605; multiple coats, thermally cured fluoropolymer finish system.
3. Color: As indicated on drawings.
C. Aluminum: ASTM B209 (ASTM B209M); 20 gauge, (0.032 inch) (0.81 mm) thick; anodized finish of color as selected.
1. Color Anodized Finish: AAMA 611 AA-M12C22A42/44 Class I integrally or electrolytically colored anodic coating not less than 0.7 mils (0.018 mm) thick.
D. Pre-Finished Aluminum: ASTM B209 (ASTM B209M); 20 gauge, (0.032 inch) (0.81 mm) thick; plain finish shop pre-coated with modified silicone coating.
1. Fluoropolymer Coating: High Performance Organic Finish, AAMA 2604; multiple coats, thermally cured fluoropolymer finish system.

2.03 FABRICATION

A. Form sections true to shape, accurate in size, square, and free from distortion or defects.
B. Form pieces in longest possible lengths.
C. Form material with flat lock seams, except where otherwise indicated; at moving joints, use sealed lapped, bayonet-type or interlocking hooked seams.

2.04 GUTTER AND DOWNSPOUT FABRICATION

A. Gutters: SMACNA (ASMM) Rectangular profile.
B. Downspouts: Rectangular profile.
C. Gutters and Downspouts: Size for rainfall intensity determined by a storm occurrence of 1 in 10 years in accordance with SMACNA (ASMM).
D. Accessories: Profiled to suit gutters and downspouts.
1. Anchorage Devices: In accordance with SMACNA (ASMM) requirements.
2. Gutter Supports: Brackets.
3. Downspout Supports: hidden brackets.
E. Splash Pads: Precast concrete type, of size and profiles indicated; minimum 3000 psi (21 MPa) at 28 days, with minimum 5 percent air entrainment.
F. Downspout Boots: Steel.
G. Downspout Extenders: Same material and finish as downspouts.

2.05 EXTERIOR PENETRATION FLASHING PANELS

A. Flashing Panels for Exterior Wall Penetrations: Premanufactured components and accessories as required to preserve integrity of building envelope; suitable for conduits and facade materials to be installed.

2.06 ACCESSORIES

A. Fasteners: Galvanized steel, with soft neoprene washers.
B. Primer: Zinc chromate type.
C. Concealed Sealants: Non-curing butyl sealant.
D. Exposed Sealants: ASTM C920; elastomeric sealant, with minimum movement capability as recommended by manufacturer for substrates to be sealed; color to match adjacent material.
E. Plastic Cement: ASTM D4586/D4586M, Type I.

PART 3 EXECUTION

3.01 INSTALLATION

A. Secure flashings in place using concealed fasteners, and use exposed fasteners only where permitted.
B. Seal metal joints watertight.
C. Slope gutters 1/4 inch per 10 feet (2.1 mm per m), minimum.

3.02 SCHEDULE

END OF SECTION 076200

SECTION 079200 - JOINT SEALANTS

PART 1 GENERAL

1.01 SUBMITTALS

A. Product Data for Sealants: Submit manufacturer's technical data sheets for each product to be used, that includes the following.
1. Physical characteristics, including movement capability, VOC content, hardness, cure time, and color availability.
2. List of backing materials approved for use with the specific product.
3. Substrates that product is known to satisfactorily adhere to and with which it is compatible.
4. Substrates the product should not be used on.
5. Installation instructions, including precautions, limitations, and recommended backing materials and tools.

B. Product Data for Accessory Products: Submit manufacturer's technical data sheet for each product to be used, including physical characteristics, installation instructions, and recommended tools.

C. Color Cards for Selection: Where sealant color is not specified, submit manufacturer's color cards showing standard colors available for selection.

D. Preconstruction Laboratory Test Reports: Submit at least four weeks prior to start of installation.

1.02 QUALITY ASSURANCE

A. Preconstruction Laboratory Testing: Arrange for sealant manufacturer(s) to test each combination of sealant, substrate, backing, and accessories.
1. Deliver to manufacturer sufficient samples for testing.
2. Report manufacturer's recommended corrective measures, if any, including primers or techniques not indicated in product data submittals.
3. Testing is not required if sealant manufacturer provides data showing previous testing, not older than 24 months, that shows satisfactory adhesion, lack of staining, and compatibility.

PART 2 PRODUCTS

2.01 JOINT SEALANT APPLICATIONS

A. Scope:
1. Exterior Joints: Seal open joints, whether or not the joint is indicated on drawings, unless specifically indicated not to be sealed. Exterior joints to be sealed include, but are not limited to, the following items.
a. Wall expansion and control joints.
b. Joints between door, window, and other frames and adjacent construction.
c. Joints between different exposed materials.
d. Openings below ledge angles in masonry.
e. Other joints indicated below.
2. Interior Joints: Do not seal interior joints unless specifically indicated to be sealed. Interior joints to be sealed include, but are not limited to, the following items.
a. Joints between door, window, and other frames and adjacent construction.
b. In sound-rated wall and ceiling assemblies, gaps at electrical outlets, wiring devices, piping, and other openings; between wall/ceiling and other construction; and other flanking sound paths.
c. Other joints indicated below.
3. Do not seal the following types of joints.
a. Intentional weepholes in masonry.
b. Joints indicated to be treated with manufactured expansion joint cover or some other type of sealing device.
c. Joints where sealant is specified to be provided by manufacturer of product to be sealed.
d. Joints where installation of sealant is specified in another section.
e. Joints between suspended panel ceilings/grid and walls.

B. Exterior Joints: Use non-sag non-staining silicone sealant, unless otherwise indicated.
C. Interior Joints: Use non-sag polyurethane sealant, unless otherwise indicated.
1. In Sound-Rated Assemblies: Acrylic emulsion latex sealant.
D. Sound-Rated Assemblies: Walls and ceilings identified as "STC-rated", "sound- rated", or "acoustical".

2.02 JOINT SEALANTS - GENERAL

A. Sealants and Primers: Provide products having lower volatile organic compound (VOC) content than indicated in SCAQMD 1168.
B. Colors: As indicated on drawings.

2.03 NONSAG JOINT SEALANTS

A. Non-Staining Silicone Sealant: ASTM C920, Grade NS, Uses M and A; not expected to withstand continuous water immersion or traffic.
1. Movement Capability: Plus and minus 25 percent, minimum.
2. Non-Staining To Porous Stone: Non-staining to light-colored natural stone when tested in accordance with ASTM C1248
3. Dirt Pick-Up: Reduced dirt pick-up compared to other silicone sealants.
4. Color: Match adjacent finished surfaces.
B. Mildew-Resistant Silicone Sealant: ASTM C920, Grade NS, Uses M and A; single component, mildew resistant; not expected to withstand continuous water immersion or traffic.
1. Color: White.
C. Polymer Sealant: ASTM C920; single component, cured sealant is paintable and mold/mildew resistant, low odor and VOC, and ultraviolet (UV) resistant.
1. Color: White.
D. ---- Hybrid Silane Polyether for Interior and Exterior Horizontal, Vertical and Overhead Use -----
E. Polyurethane Sealant: ASTM C920, Grade NS, Uses M and A; single or multi-component; not expected to withstand continuous water immersion or traffic.
1. Movement Capability: Plus and minus 25 percent, minimum.
F. Acrylic Emulsion Latex: Water-based; ASTM C834, single component, non-staining, non-bleeding, non-sagging; not intended for exterior use.
1. Color: Standard colors matching finished surfaces, Type OP (opaque).

2.04 ACCESSORIES

A. Backer Rod: Cylindrical cellular foam rod with surface that sealant will not adhere to, compatible with specific sealant used, and recommended by backing and sealant manufacturers for specific application.
1. Type for Joints Not Subject to Pedestrian or Vehicular Traffic: ASTM C1330; Type O - Open Cell Polyurethane.
2. Open Cell: 40 to 50 percent larger in diameter than joint width.
B. Backing Tape: Self-adhesive polyethylene tape with surface that sealant will not adhere to and recommended by tape and sealant manufacturers for specific application.

PART 3 EXECUTION

3.01 EXAMINATION

3.02 INSTALLATION

A. Perform work in accordance with sealant manufacturer's requirements for preparation of surfaces and material installation instructions.
B. Perform installation in accordance with ASTM C1193.
C. Perform acoustical sealant application work in accordance with ASTM C919.
D. Install bond breaker backing tape where backer rod cannot be used.
E. Install sealant free of air pockets, foreign embedded matter, ridges, and sags, and without getting sealant on adjacent surfaces.
F. Non-sag Sealants: Tool surface concave, unless otherwise indicated; remove masking tape immediately after tooling sealant surface.

END OF SECTION 079200

SECTION 081423 - CLAD WOOD DOORS

PART 1 GENERAL

1.01 SUBMITTALS

A. Product Data: Indicate door core materials and construction; veneer species, type and characteristics.
B. Shop Drawings: Show doors and frames, elevations, sizes, types, swings, undercuts, beveling, blocking for hardware, factory machining, factory finishing, cutouts for glazing and other details.
C. Samples: Submit two samples of door veneer, [6" by 6"] inch in size illustrating wood grain, stain color, and sheen.

1.02 QUALITY ASSURANCE

1.03 WARRANTY

A. Include coverage for delamination of veneer, warping beyond specified installation tolerances, defective materials, and telegraphing core construction.

PART 2 PRODUCTS

2.01 COMPONENTS

A. Clad Wood Doors: See drawings for locations and additional requirements.
B. Stile and Rail Clad Wood Doors: Stile and rail wood doors, laminated veneer lumber (LVL) construction with wood veneer, kiln dried and suitable for interior finish as indicated.
1. Provide mortise and tenon joints at each corner with lag screw reinforcement.
C. Exterior Clad Wood Doors: Water-repellent and preservative-treated lumber in accordance with WDMA I.S. 4.
1. Thickness: 1-3/4 inches (44 mm), unless otherwise indicated.
2. Exterior Door Cladding: Aluminum sheet as indicated.
3. Exterior Frame Cladding: Extruded aluminum as indicated.
D. Configuration: As indicated on drawings.
E. Glazing Stops: Wood, of same species as door facing, butted corners; prepared for countersink style tamper proof screws.
1. Apply silicone glazing sealant to exterior glazing stops as recommended by manufacturer.
2. Apply water repellent treatment to wood glazing stops.
F. Door Stops: Clear preservative treated wood, finished to match frame.
G. Door Sill: Extruded 6063-T5 aluminum, 1/2 inch (12.7 mm) low profile threshold with compressible bulb weatherstripping and attached to frame jambs.
1. Color: Mill finish.
H. Hinges: Heavy duty ball bearing type, 4-1/2 inch (114 mm), with non-removable pin and set screw.
1. Finish: White, powder coated.

2.02 DOOR INTERIOR WOOD FACINGS

A. Veneer Facing for Transparent Finish: Red Oak, veneer grade in accordance with requirements indicated, and plain sliced (flat cut), with book match between leaves of veneer, and running match of spliced veneer leaves assembled on door or panel face.
B. Door Edging: Any option allowed by quality standard for grade.
C. Wood Finish: Factory applied primer and field applied opaque finish.
1. Color: White, over primer.
2. Field finish doors as specified in Section 099123.
D. Facing Adhesive: Type I - waterproof.

2.03 DOOR EXTERIOR CLADDING
A. Aluminum Cladding: 6063-T5 aluminum cladding on exterior side, 0.045 inch (1.14 mm) minimum thickness, factory fabricated, factory glazed; complete with integral sloped sill/threshold, flashings, and anchorage devices.
B. Exterior Aluminum Finish: Class II color anodized.
C. Aluminum Members: Factory finished; solid corner construction; thermally broken.
D. Drainage: Provide drainage to exterior for moisture entering joints and glazing spaces and for condensation occurring within frame construction.

2.04 FABRICATION

A. Fabricate doors in accordance with door quality standard specified.
B. Factory machine doors for hardware other than surface-mounted hardware, in accordance with hardware requirements and dimensions.
C. Factory fit doors for frame opening dimensions identified on shop drawings,with edge clearances in accordance with specified quality standard.

2.05 FACTORY FINISHING - WOOD VENEER INTERIOR FACE

A. Factory finish doors in accordance with approved sample.
B. Seal door top edge with color sealer to match door facing.

2.06 ACCESSORIES

A. Door Astragals: Thickness, wood species, and interior and exterior finishes to match door; provide with weather seals.

PART 3 EXECUTION

3.01 INSTALLATION

A. Install doors in accordance with manufacturer's instructions and specified quality standard.
B. Assemble multiple units before installation in accordance with manufacturer's installation guidelines.
C. Coordinate installation of doors with installation of integral frames and hardware.

END OF SECTION 081423

SECTION 081433 - STILE AND RAIL WOOD DOORS

PART 1 GENERAL

1.01 SUBMITTALS

A. Product Data: Indicate stile and rail core materials and construction; veneer species, type and characteristics.
B. Samples: Submit two samples of door veneer, 6" x 6" inch in size illustrating wood grain, stain color, and sheen.

1.02 WARRANTY

A. Include coverage for delamination of veneer, warping beyond specified installation tolerances, defective materials, and telegraphing core construction.

PART 2 PRODUCTS

2.01 DOORS

A. Exterior Doors: 1-3/4 inches (44.45 mm) thick unless otherwise indicated; solid lumber construction; mortise and tenon joints; water repellent treated. Transparent finish as indicated on drawings.
B. Interior Doors: 1-3/8 inches (34.93 mm) thick unless otherwise indicated; solid lumber construction; mortise and tenon joints. Transparent or opaque finish as indicated on drawings.

2.02 DOOR AND PANEL FACINGS

A. Veneer Facing for Transparent Finish: Natural Birch, veneer grade in accordance with quality standard indicated, plain sliced (flat cut), with book match between leaves of veneer, running match of spliced veneer leaves assembled on door or panel face.
B. Materials for Opaque Finishes: Hardboard faces.
C. Adhesive: Type I - Waterproof.

2.03 DOOR CONSTRUCTION

A. Panels: Flat.
B. At exterior doors, provide aluminum flashing at the top and bottom rail for full thickness and width of door.
C. Fire Rated Doors: Mineral core type, with fire resistant composite core (FD), plies and faces as indicated above; with core blocking as required to provide adequate anchorage of hardware without through-bolting.
D. Fire Rated Doors: Tested to ratings indicated on drawings in accordance with NFPA 252 or UL 10B - Negative (Neutral) Pressure; listed in UL (DIR) or ITS (DIR) and without any visible seals when door is open.

2.04 FACTORY FINISHING

A. Finish work in accordance with AWI/AWMAC/WI (AWS) or AWMAC/WI (NAAWS), Section 5 - Finishing for grade specified and as follows:
1. Transparent:
a. System - 1, Lacquer, Nitrocellulose.
b. Stain: As selected by Architect.
c. Sheen: Flat.
2. Opaque:
a. System - 1, Lacquer, Nitrocellulose.
b. Color: As selected by Architect.
c. Sheen: Flat.

ZplusZ ARCHITECTS PC
240 WEST CRESCENT AVENUE
ALLENDALE, NJ 07401
TEL: 201.785.8855
www.zplusarchitects.com

PROJECT TEAM:

CIVIL
SCHWANEWEDE, HALS, & VINCE
111 LITTLETON RD #200
PARSIPPANY-TROY HILLS, NJ
201-337-0053

SEAL:

Michael Scro
NJ LIC# 18626

BALIWALA

10 BIRCH LANE, WALDWICK, NJ
City, State Zip

Copyright © 2019 - Z+ Architect, LLC

All dimensions and existing conditions shall be checked & verified by the contractor before proceeding with the work.

REV	DATE	DESCRIPTION

SHEET TITLE:

SPECIFICATIONS

DESIGN DELIVERABLE: PERMIT SET

ISSUE DATE: 06/23/25

PROJECT #: 2508

DRAWN BY: AR

CHECKED BY: MS

SHEET NUMBER:

G-4

REVIT 2020

2.05 ACCESSORIES

A. Wood Door Frames: As specified in Section 062000.
B. Glazed Openings:
1. Heat-Strengthened and Fully Tempered Glass: ASTM C1048.
2. Fire-Protection-Rated Glass: Safety Certification, 16 CFR 1201, Category II.
3. Tint: Clear.
C. Metal Louvers: As specified in Section 08 1113.

PART 3 EXECUTION

3.01 INSTALLATION

A. Install doors in accordance with manufacturer's instructions and specified quality standards.
1. Install fire-rated doors in accordance with NFPA 80 requirements.
2. Install exterior doors in accordance with ASTM E2112.
B. Coordinate installation of doors with installation of frames and hardware.

3.02 TOLERANCES

A. Comply with specified quality standard for fit, clearance, and joinery tolerances.

END OF SECTION 081433

SECTION 092116 - GYPSUM BOARD ASSEMBLIES

PART 1 GENERAL

1.01 SUBMITTALS

A. Shop Drawings: Indicate special details associated with fireproofing and acoustic seals.
B. Product Data: Provide data on gypsum board, accessories, joint finishing system, and wood framing.
C. Product Data: Provide manufacturer's data on partition head to structure connectors, showing compliance with requirements.
D. Samples: Submit two samples of gypsum board finished with proposed texture application, 12 by 12 inches (300 by 300 mm) in size, illustrating finish color and texture.

PART 2 PRODUCTS

2.01 GYPSUM BOARD ASSEMBLIES

A. Provide completed assemblies complying with ASTM C840 and GA-216.
B. Fire-Resistance-Rated Assemblies: Provide completed assemblies with the following characteristics:
1. Fire-Resistance-Rated Partitions: as shown on construction drawings.

2.02 BOARD MATERIALS

A. Gypsum Wallboard: Paper-faced gypsum panels as defined in ASTM C1396/C1396M; sizes to minimize joints in place; ends square cut.
1. Application: Use for vertical surfaces and ceilings, unless otherwise indicated.
2. Mold Resistance: Score of 10, when tested in accordance with ASTM D3273.
a. Mold-resistant board is required whenever board is being installed before the building is enclosed and conditioned.
b. Mold resistant board is required as shown on construction drawings.
3. Thickness:
a. Vertical Surfaces: 1/2 inch (13 mm).

B. Backing Board For Wet Areas: One of the following products:
1. Application: Surfaces behind tile in wet areas including tub and shower surrounds and shower ceilings.
2. Application: Horizontal surfaces behind tile in wet areas including countertops.
3. Mold Resistance: Score of 10, when tested in accordance with ASTM D3273.
4. ANSI Cement-Based Board: Non-gypsum-based; aggregated Portland cement panels with glass fiber mesh embedded in front and back surfaces complying with ANSI A118.9 or ASTM C1325.
5. ASTM Cement-Based Board: Non-gypsum-based, cementitious board complying with ASTM C1288.

C. Backing Board For Non-Wet Areas: Water-resistant gypsum backing board as defined in ASTM C1396/C1396M; sizes to minimum joints in place; ends square cut.
1. Application: Vertical surfaces behind thinset tile, except in wet areas.
2. Mold Resistance: Score of 10, when tested in accordance with ASTM D3273.
3. At Assemblies Indicated with Fire-Resistance Rating: Use type required by indicated tested assembly; if no tested assembly is indicated, use Type X board, UL or WH listed.
4. Type: Regular and Type X, in locations indicated.
5. Type X Thickness: 5/8 inch (16 mm).
6. Type C Thickness: 1/2 inch (13 mm).
7. Regular Board Thickness: 1/2 inch (13 mm).
8. Edges: Tapered.

2.03 Gypsum Wallboard ACCESSORIES
A. Acoustic Insulation: See Section 072100.
B. Acoustical Shielding: Recycled ethylene vinyl acetate (EVA) sheet membrane; applied between studs and gypsum board.
1. Sound Transmission Class (STC): Minimum of 45, calculated in accordance with ASTM E413, based on tests conducted in accordance with ASTM E90.
C. Finishing Accessories: ASTM C1047, extruded aluminum alloy (6063 T5) or galvanized steel sheet ASTM A924/A924M G90, unless noted otherwise.
1. Types: As detailed or required for finished appearance.
2. Special Shapes: In addition to conventional corner bead and control joints, provide U-bead at exposed panel edges.
D. Beads, Joint Accessories, and Other Trim: ASTM C1047, rigid plastic, galvanized steel, or rolled zinc, unless noted otherwise.
1. Corner Beads: Low profile, for 90 degree outside corners.
2. Corner Beads: Low profile, for archways.
3. Architectural Reveal Beads:
a. Reveal Depth: 1/2 inch (12 mm).
b. Reveal Width: 1/2 inch (12 mm).
c. Shapes: As indicated on drawings.
4. Expansion Joints:
E. Joint Materials: ASTM C475/C475M and as recommended by gypsum board manufacturer for project conditions.
1. Fiberglass Tape: 2 inch (50 mm) wide, coated glass fiber tape for joints and corners, except as otherwise indicated.
2. Paper Tape: 2 inch (50 mm) wide, creased paper tape for joints and corners, except as otherwise indicated.
3. Joint Compound: Drying type, vinyl-based, ready-mixed.
4. Joint Compound: Setting type, field-mixed.
F. Nails for Attachment to Wood Members: ASTM C514.
G. Anchorage to Substrate: Tie wire, nails, screws, and other metal supports, of type and size to suit application; to rigidly secure materials in place.

PART 3 EXECUTION
3.01 FRAMING INSTALLATION

3.02 ACOUSTIC ACCESSORIES INSTALLATION
A. Acoustic Insulation: Place tightly within spaces, around cut openings, behind and around electrical and mechanical items within partitions, and tight to items passing through partitions.

3.03 BOARD INSTALLATION
A. Comply with ASTM C840, GA-216, and manufacturer's instructions. Install to minimize butt end joints, especially in highly visible locations.
B. Single-Layer Nonrated: Install gypsum board perpendicular to framing, with ends and edges occurring over firm bearing.
C. Fire-Resistance-Rated Construction: Install gypsum board in strict compliance with requirements of assembly listing.
D. Cementitious Backing Board: Install over wood framing members and plywood substrate where indicated, in accordance with ANSI A108.11 and manufacturer's instructions.
E. Installation on Wood Framing: For rated assemblies, comply with requirements of listing authority. For nonrated assemblies, install as follows:

3.04 JOINT TREATMENT
A. Finish gypsum board in accordance with levels defined in ASTM C840, as follows:
1. Level 5: Walls and ceilings to receive semi-gloss or gloss paint finish and other areas specifically indicated.
2. Level 4: Walls and ceilings to receive paint finish or wall coverings, unless otherwise indicated.
3. Level 3: Walls to receive textured wall finish.
4. Level 2: In utility areas, behind cabinetry, and on backing board to receive tile finish.
5. Level 1: Fire-resistance-rated wall areas above finished ceilings, whether or not accessible in the completed construction.

END OF SECTION 092116

SECTION 093000 - TILING

PART 1 GENERAL
1.01 SUBMITTALS

A. Product Data: Provide manufacturers' data sheets on tile, mortar, grout, and accessories. Include instructions for using grouts and adhesives.
B. Shop Drawings: Indicate tile layout, patterns, color arrangement, perimeter conditions, junctions with dissimilar materials, control and expansion joints, thresholds, ceramic accessories, and setting details.
C. Samples: Mount tile and apply grout on two plywood panels, minimum 24 by 24 inches in size illustrating pattern, color variations, and grout joint size variations.

1.02 MOCK-UP

A. See Section 014000 - Quality Requirements, for general requirements for mock-up.
B. Construct tile mock-up where indicated on drawings, incorporating all components specified for the location.

1.03 FIELD CONDITIONS

A. Do not install solvent-based products in an unventilated environment.
B. Maintain ambient and substrate temperature above 50 degrees F(10 degrees C) and below 100 degrees F (38 degrees C) during installation and curing of setting materials.

PART 2 PRODUCTS

2.01 TILE

A. Manufacturers: All products of each type by the same manufacturer.

2.02 TRIM AND ACCESSORIES

A. Pre-Formed Accessories To Be Covered with Tile: High density expanded polystyrene with ANSI A118.10 waterproofing finish or membrane.
B. Non-Ceramic Trim: Brushed stainless steel, or as indicated on finish schedule, style and dimensions to suit application, for setting using tile mortar or adhesive.
1. Applications: as indicated on drawings
C. Thresholds: 2 inches (51 mm) wide by full width of wall or frame opening; beveled edge on both long edges; without holes, cracks, or open seams.
1. Color and Pattern: As indicated on drawings.

2.03 SETTING MATERIALS

A. Provide setting and grout materials from same manufacturer.
B. Latex-Portland Cement Mortar Bond Coat: ANSI A118.4.
1. Applications: Use this type of bond coat where Large and Heavy Tile (LHT) mortar is indicated.
C. Improved Latex-Portland Cement Mortar Bond Coat: ANSI A118.15.
1. Applications: Use this type of bond coat where Large and Heavy Tile (LHT) mortar is indicated.
D. Epoxy Adhesive and Mortar Bond Coat: ANSI A118.3.
E. Mortar Bed Materials: Pre-packaged mix of Portland cement, sand, latex additive, and water.

2.04 GROUTS

A. Provide setting and grout materials from same manufacturer.
B. Standard Grout: ANSI A118.6 standard cement grout.
1. Applications: Use this type of grout where indicated and where no other type of grout is indicated.
2. Use sanded grout for joints 1/8 inch (3.2 mm) wide and larger; use unsanded grout for joints less than 1/8 inch (3.2 mm) wide.
C. Premixed Polymer Modified Grout: Single component, stain resistant grout.
1. Applications: Where indicated.

2.05 Maintenance Materials

A. Grout Sealer: Liquid-applied, moisture and stain protection for existing or new Portland cement grout.
1. Composition: Water-based colorless silicone.

2.06 ACCESSORY MATERIALS

A. Concrete Floor Slab Crack Isolation Membrane: Material complying with ANSI A118.12; not intended as waterproofing.
1. Crack Resistance: No failure at 1/8 inch (3.2 mm) gap, minimum.
2. Fluid or Trowel Applied Type:
a. Material: Synthetic rubber or Acrylic.
b. Thickness: 20 mils (0.5 mm), maximum.
3. Peel-and-Stick Sheet Type:
a. Material: Rubberized membrane laminated to reinforcing fabric.
b. Thickness: 20 mils (0.5 mm), maximum.
B. Waterproofing Membrane at Floors: Specifically designed for bonding to cementitious substrate under thick mortar bed or thin-set tile; complying with ANSI A118.10.
1. Crack Resistance: No failure at 1/16 inch (1.6 mm) gap, minimum; comply with ANSI A118.12.
2. Fluid or Trowel Applied Type:
a. Material: Synthetic rubber or Acrylic.
b. Thickness: 25 mils (0.6 mm), minimum, dry film thickness.
3. Bonded Sheet Membrane Type:
a. Material: PVC sheet membrane with polyester fleece laminated to both sides, 40 mils (1 mm) thick, nominal.
b. Material: Polyethylene sheet membrane with non-woven fabric laminated to both sides, 20 to 30 mils (0.5 to 0.8 mm) thick, nominal.
C. Waterproofing Membrane at Showers and Tiled Tubs: Specifically designed for bonding to cementitious substrate under thick mortar bed or thin-set tile; complying with ANSI A118.10.
1. Fluid or Trowel Applied Type:
a. Material: Synthetic rubber.
b. Material: Acrylic.
c. Thickness: 25 mils (0.6 mm), minimum, dry film thickness.
2. Peel-and-Stick Sheet Type:
a. Material: Rubberized membrane laminated to reinforcing fabric, 40 mils (1 mm), thick, minimum.
D. Waterproofing Membrane Under Thick Mortar Bed at Showers and Tiled Tubs:
1. Material: Chlorinated polyethylene sheet, 40 mils (1.0 mm) thick, minimum; complying with ASTM D4068.
E. Backer Board: Cementitious type complying with ANSI A118.9; high density, glass fiber reinforced, 1/2 inch (12.7 mm) thick; 2 inch (51 mm) wide coated glass fiber tape for joints and corners.

PART 3 EXECUTION

3.01 INSTALLATION - GENERAL

A. Install tile, thresholds, and stair treads and grout in accordance with applicable requirements of ANSI A108.1a through ANSI A108.19, manufacturer's instructions, and TCNA (HB) recommendations.
B. Lay tile to pattern indicated. Do not interrupt tile pattern through openings.

3.02 INSTALLATION - FLOORS - THIN-SET METHODS

A. Over exterior concrete substrates, install in accordance with TCNA (HB) Method F102, with standard grout.
B. Over interior concrete substrates, install in accordance with TCNA (HB) Method F113, dry-set or latex-Portland cement bond coat, with standard grout, unless otherwise indicated.
C. Over wood substrates, install in accordance with TCNA (HB) Method F142, with standard grout, unless otherwise indicated.

3.03 INSTALLATION - FLOORS - MORTAR BED METHODS

A. Over exterior concrete substrates, install in accordance with TCNA (HB) Method F101, bonded, with standard grout.
B. Over interior concrete substrates, install in accordance with TCNA (HB) Method F111, with cleavage membrane, unless otherwise indicated.
C. Over wood substrates, install in accordance with TCNA (HB) Method F141, with standard grout, unless otherwise indicated.

3.04 INSTALLATION - SHOWERS AND BATHTUB WALLS

A. At tiled shower receptors install in accordance with TCNA (HB) Method B415, mortar bed floor, and W244, thin-set over cementitious backer unit walls.
B. At bathtub walls install in accordance with TCNA (HB) Method B412, over cementitious backer units with waterproofing membrane.
C. Grout with standard grout as specified above.

3.05 INSTALLATION - WALL TILE

A. On exterior walls install in accordance with TCNA (HB) Method W244, thin-set over cementitious backer units, with waterproofing membrane.
B. Over cementitious backer units on studs, install in accordance with TCNA (HB) Method W244, using membrane at toilet rooms.

END OF SECTION 093000

SECTION 096429 - WOOD STRIP AND PLANK FLOORING

PART 1 GENERAL

1.01 SUBMITTALS

A. Product Data: Provide data for flooring.
B. Shop Drawings: Indicate floor joint pattern and termination details.
C. Samples: Submit two samples 12" by 12" inch in size illustrating floor finish, color, and sheen.

1.02 FIELD CONDITIONS

A. Do not install wood flooring until wet construction work is complete and ambient air at installation space has moisture content stabilized at maximum moisture content of 40 percent.
B. Maintain minimum room temperature of 65 degrees F (18 degrees C) for a period of two days prior to delivery of materials to installation space, during installation, and after installation.

PART 2 PRODUCTS

2.01 MATERIALS

A. Wood Strip Flooring - Type as indicated on drawings:
B. Flooring Nails: Type recommended by flooring manufacturer.
C. Sleepers and Shims: Softwood lumber, pressure treated for moisture protection, 2 by 4 inch (50 by 100 mm) size.
D. Vapor Retarder: Black polyethylene sheet, 8 mil (0.2 mm) thick; 2 inch (50 mm) wide tape for joint sealing.
E. Sheathing Paper: Plain building paper.

2.02 ACCESSORIES

A. Wood Base: Same species as flooring; profile as indicated.
B. Sound Control Underlayment: Recycled rubber type complying with ASTM D3676.
C. Floor Finish: Polyurethane, to achieve finish sheen as specified on drawings surface; type recommended by flooring manufacturer.

PART 3 EXECUTION

3.01 INSTALLATION

A. Sheathing Paper: Place over wood subfloor; lap edges and ends 2 inches (50 mm), staple in place.
B. Underlayments: Install in accordance with underlayment manufacturer's instructions.
C. Wood Flooring:
1. Install in accordance with manufacturer's and NWFA instructions; predrill and blind nail to subfloor.
2. Lay flooring parallel to length of room areas. Verify alignment as work progresses.
D. Install base at floor perimeter to cover expansion space in accordance with manufacturer's instructions. Miter inside and outside corners.
E. Finishing:
1. Sand flooring to smooth even finish with no evidence of sander marks. Take precautions to contain dust. Remove dust by vacuum.
2. Apply finish in accordance with floor finish manufacturer's instructions.
3. Apply last coat of finish.

END OF SECTION 096429

SECTION 099113 - EXTERIOR PAINTING

PART 1 GENERAL
1.01 SECTION INCLUDES
A. Scope: Finish exterior surfaces exposed to view, unless fully factory-finished and unless otherwise indicated, including the following:
1. Exposed surfaces of steel lintels and ledge angles.

B. Do Not Paint or Finish the Following Items:
1. Items factory-finished unless otherwise indicated; materials and products having factory-applied primers are not considered factory finished.
2. Items indicated to receive other finishes.
3. Items indicated to remain unfinished.
4. Fire rating labels, equipment serial number and capacity labels, and operating parts of equipment.
5. Stainless steel, anodized aluminum, bronze, terne-coated stainless steel, zinc, and lead.
6. Marble, granite, slate, and other natural stones.
7. Floors, unless specifically indicated.
8. Ceramic and other types of tiles.
9. Brick, glass unit masonry, architectural concrete, cast stone, integrally colored plaster and stucco.
10. Exterior insulation and finish system (EIFS).
11. Glass.
12. Concealed pipes, ducts, and conduits.

1.02 SUBMITTALS

A. Product Data: Provide complete list of products to be used, with the following information for each:
1. Manufacturer's name, product name and/or catalog number, and general product category (e.g. "alkyd enamel").
2. MPI product number (e.g. MPI #47).
3. Cross-reference to specified paint system(s) product is to be used in; include description of each system.

PART 2 PRODUCTS

2.01 MANUFACTURERS

A. Provide paints and finishes used in any individual system from the same manufacturer; no exceptions.
B. Provide paints and finishes from the same manufacturer to the greatest extent possible.

2.02 PAINTS AND FINISHES - GENERAL

A. Paints and Finishes: Ready-mixed, unless required to be a field-catalyzed paint.
1. Provide paints and finishes of a soft paste consistency, capable of being readily and uniformly dispersed to a homogeneous coating, with good flow and brushing properties, and capable of drying or curing free of streaks or sags.
2. Provide materials that are compatible with one another and the substrates indicated under conditions of service and application, as demonstrated by manufacturer based on testing and field experience.
3. Supply each paint material in quantity required to complete entire project's work from a single production run.
4. Do not reduce, thin, or dilute paint or finishes or add materials unless such procedure is described explicitly in manufacturer's product instructions.
B. Volatile Organic Compound (VOC) Content:
1. Provide paints and finishes that comply with the most stringent requirements specified in the following:
a. 40 CFR 59, Subpart D--National Volatile Organic Compound Emission Standards for Architectural Coatings.
2. Determination of VOC Content: Testing and calculation in accordance with 40 CFR 59, Subpart D (EPA Method 24), exclusive of colorants added to a tint base and water added at project site; or other method acceptable to authorities having jurisdiction.

C. Colors: As indicated in Color Schedule.

2.03 PAINT SYSTEMS - EXTERIOR

A. Exterior Surfaces to be Painted, Unless Otherwise Indicated: Including concrete, concrete masonry units, fiber cement siding, primed wood, and primed metal.
1. Two top coats and one coat primer.

PART 3 EXECUTION

3.01 EXAMINATION

A. Measure moisture content of surfaces using an electronic moisture meter. Do not apply finishes unless moisture content of surfaces are below the following maximums:
1. Exterior Plaster and Stucco: 12 percent.
2. Fiber Cement Siding: 12 percent.
3. Masonry, Concrete, and Concrete Masonry Units: 12 percent.
4. Exterior Wood: 15 percent, measured in accordance with ASTM D4442.
5. Concrete Floors and Traffic Surfaces: 8 percent.

3.02 PREPARATION

A. Clean surfaces thoroughly and correct defects prior to application.
B. Prepare surfaces using the methods recommended by the manufacturer for achieving the best result for the substrate under the project conditions.

3.03 APPLICATION

A. Apply products in accordance with manufacturer's written instructions and recommendations in "MPI Architectural Painting Specification Manual".
B. Do not apply finishes to surfaces that are not dry. Allow applied coats to dry before next coat is applied.

END OF SECTION 099113

SECTION 099123 - INTERIOR PAINTING

PART 1 GENERAL

1.01 SECTION INCLUDES

A. Scope: Finish interior surfaces exposed to view, unless fully factory-finished and unless otherwise indicated.
1. Prime surfaces to receive wall coverings.
B. Do Not Paint or Finish the Following Items:
1. Items factory-finished unless otherwise indicated; materials and products having factory-applied primers are not considered factory finished.
2. Items indicated to receive other finishes.
3. Items indicated to remain unfinished.
4. Fire rating labels, equipment serial number and capacity labels, bar code labels, and operating parts of equipment.
5. Stainless steel, anodized aluminum, bronze, terne coated stainless steel, and lead items.
6. Marble, granite, slate, and other natural stones.
7. Floors, unless specifically indicated.
8. Brick, architectural concrete, cast stone, integrally colored plaster and stucco.
9. Glass.
10. Acoustical materials, unless specifically indicated.
11. Concealed pipes, ducts, and conduits.

1.02 SUBMITTALS

A. Product Data: Provide complete list of products to be used, with the following information for each:
1. Cross-reference to specified paint system(s) product is to be used in; include description of each system.

B. Samples: Submit three paper "draw down" samples, 8-1/2 by 11 inches (216 by 279 mm) in size, illustrating range of colors available for each finishing product specified.
1. Where sheen is specified, submit samples in only that sheen.

PART 2 PRODUCTS

2.01 MANUFACTURERS

A. Provide paints and finishes used in any individual system from the same manufacturer; no exceptions.

2.02 PAINTS AND FINISHES - GENERAL

A. Paints and Finishes: Ready mixed, unless intended to be a field-catalyzed paint.
B. Volatile Organic Compound (VOC) Content:
1. Provide paints and finishes that comply with the most stringent requirements specified in the following:
a. 40 CFR 59, Subpart D--National Volatile Organic Compound Emission Standards for Architectural Coatings.
2. Determination of VOC Content: Testing and calculation in accordance with 40 CFR 59, Subpart D (EPA Method 24), exclusive of colorants added to a tint base and water added at project site; or other method acceptable to authorities having jurisdiction.

C. Colors: As indicated on drawings.

2.03 PAINT SYSTEMS - INTERIOR

A. Interior Surfaces to be Painted, Unless Otherwise Indicated: Including gypsum board, concrete, concrete masonry units, wood, plaster, uncoated steel, shop primed steel, galvanized steel, and aluminum.

PART 3 EXECUTION

3.01 EXAMINATION

A. Measure moisture content of surfaces using an electronic moisture meter. Do not apply finishes unless moisture content of surfaces are below the following maximums:
1. Gypsum Wallboard: 12 percent.
2. Plaster and Stucco: 12 percent.
3. Masonry, Concrete, and Concrete Masonry Units: 12 percent.
4. Interior Wood: 15 percent, measured in accordance with ASTM D4442.

3.02 PREPARATION

A. Clean surfaces thoroughly and correct defects prior to application.
B. Prepare surfaces using the methods recommended by the manufacturer for achieving the best result for the substrate under the project conditions.

3.03 APPLICATION

A. Apply products in accordance with manufacturer's written instructions and recommendations in "MPI Architectural Painting Specification Manual".
B. Do not apply finishes to surfaces that are not dry. Allow applied coats to dry before next coat is applied.

END OF SECTION 099123

SECTION 099300 - STAINING AND TRANSPARENT FINISHING

PART 1 GENERAL

1.01 SUBMITTALS

A. Product Data: Provide complete list of products to be used, with the following information for each:
1. Manufacturer's name, product name and/or catalog number, and general product category.
2. Manufacturer's installation instructions.

B. Samples: Submit two samples, illustrating selected colors and sheens for each system with specified coats cascaded. Submit on actual wood substrate to be finished, 12x12 inch in size.

C. Applicator's Qualification Statement.

1.02 QUALITY ASSURANCE

A. Manufacturer Qualifications: Company specializing in manufacturing the products specified, with minimum three years documented experience.
B. Applicator Qualifications: Company specializing in performing the type of work specified with minimum 3 years experience and approved by manufacturer.

PART 2 PRODUCTS

2.01 MANUFACTURERS

A. Provide finishes used in any individual system from the same manufacturer; no exceptions.

B. Provide finishes from the same manufacturer to the greatest extent possible.

2.02 Stains and Transparent FINISHES - GENERAL

A. Finishes:
1. Provide finishes capable of being readily and uniformly dispersed to a homogeneous coating, with good flow and brushing properties, and capable of drying or curing free of streaks or sags.
2. Provide materials that are compatible with one another and the substrates indicated under conditions of service and application, as demonstrated by manufacturer based on testing and field experience.
3. Supply each finish material in quantity required to complete entire project's work from a single production run.
4. Do not reduce, thin, or dilute finishes or add materials unless such procedure is specifically described in manufacturer's product instructions.

B. Volatile Organic Compound (VOC) Content:
1. Provide stains and transparent finishes that comply with the most stringent requirements specified in the following:
a. 40 CFR 59, Subpart D--National Volatile Organic Compound Emission Standards for Architectural Coatings.
2. Determination of VOC Content: Testing and calculation in accordance with 40 CFR 59, Subpart D (EPA Method 24), exclusive of colorants added to a tint base and water added at project site; or other method acceptable to authorities having jurisdiction.

C. Sheens: Provide the sheens specified; where sheen is not specified, sheen will be selected later by Architect from the manufacturer's full line.

2.03 Interior STAIN AND TRANSPARENT FINISH SYSTEMS

PART 3 EXECUTION

3.01 EXAMINATION

A. Measure moisture content of surfaces using an electronic moisture meter. Do not apply finishes unless moisture content of surfaces are below the following maximums:
1. Wood: 15 percent, measured in accordance with ASTM D4442.

3.02 PREPARATION

A. Clean surfaces thoroughly and correct defects prior to application.
B. Prepare surfaces using the methods recommended by the manufacturer for achieving the best result for the substrate under the project conditions.

3.03 APPLICATION

A. Apply products in accordance with manufacturer's written instructions and recommendations in "MPI Architectural Painting Specification Manual".
B. Do not apply finishes to surfaces that are not dry. Allow applied coats to dry before next coat is applied.
C. Apply each coat to uniform appearance in thicknesses specified by manufacturer.

END OF SECTION 099300

ZplusZ ARCHITECTS LLC
240 WEST CRESCENT AVENUE
ALLENDALE, NJ 07401
TEL: 201.785.8855
www.zplusarchitects.com

PROJECT TEAM:

CIVIL
SCHWANEWEDE, HALS, & VINCE
111 LITTLETON RD #200
PARSIPPANY-TROY HILLS, NJ
201-337-0053

seal:

Michael Scro
NJ LIC# 18626

BALIWALA

10 BIRCH LANE, WALDWICK, NJ
City, State Zip

Copyright © 2019 , Z+ Architect, LLC

All dimensions and existing conditions shall be checked & verified by the contractor before proceeding with the work.

REV	DATE	DESCRIPTION

SHEET TITLE:

SPECIFICATIONS

DESIGN DELIVERABLE: PERMIT SET

ISSUE DATE: 06/23/25

PROJECT #: 2508

DRAWN BY: AR

CHECKED BY: MS

SHEET NUMBER:

G-5

REVIT 2020

GENERAL NOTES: **ANY DEVIATION FROM THE DRAWINGS WITHOUT PRIOR WRITTEN CONFIRMATION WILL VOID ANY RELATED RESPONSIBILITY**

1. THE CONTRACTORS ARE RESPONSIBLE FOR ALL REQUIREMENTS OUTLINED IN THE I.B.C. CODE, STATE UNIFORM CONSTRUCTION CODE, MUNICIPAL CODES AND ORDINANCES, AND SHALL COMPLY WITH GOVERNING CODE AS ADMINISTERED BY MUNICIPAL BUILDING OFFICALS AND SHALL BE CONSIDERED AS PART OF THESE CONSTRUCTION DOCUMENTS. WHERE DRAWINGS CONFLICT WITH CODES, CODE REQUIREMENTS SHALL TAKE PRECEDENCE.
2. THE CONTRACTOR SHALL INVESTIGATE AND VERIFY ALL DIMENSIONS AND EXISTING CONDITIONS BEFORE ORDERING MATERIALS AND PREFABRICATED ITEMS. THE CONTRACTOR SHALL PROVIDE ALL EQUIPMENT, LABOR AND MATERIALS NECESSARY FOR THE PROPER EXECUTION AND COMPLETION OF THE WORK IN ACCORDANCE WITH THESE PLANS.
3. ALL WORK SHALL BE DONE IN A FIRST-CLASS MANNER BY EXPERIENCED MECHANICS SKILLED IN THEIR TRADE.
4. ALL CONTRACTORS SHALL CARRY INSURANCE AS WILL PROTECT THE OWNER FROM CLAIMS FOR DAMAGES AND PERSONAL INJURIES, INCLUDING DEATH, WHICH MAY ARISE IN CONNECTION WITH THIS PROJECT.
5. THE GENERAL CONTRACTOR SHALL BE RESPONSIBLE FOR OBTAINING ALL LOCAL AND STATE PERMITS NEEDED FOR CONSTRUCTION AND COMPLETION OF PROJECT.
6. IT WILL BE THE CONTRACTOR'S RESPONSIBILITY TO KEEP THE SPACE SECURE AND LOCKED DURING ALL PHASES OF CONSTRUCTION.
7. THE BUILDING AND SITE SHALL BE KEPT CLEAN AT ALL TIMES. AFTER COMPLETION OF THE WORK THE CONTRACTOR SHALL REMOVE ALL EXCESS MATERIALS, ALL TRASH AND DEBRIS CAUSED BY HIS WORK.
8. THESE DRAWINGS DO NOT CONTAIN COMPLETE SPECIFICATIONS, DETAILS AND INFORMATION REQUIRED FOR THE INTERIOR FINISHES OF THE PROJECT. ADDITIONAL INFORMATION SHALL BE OBTAINED FROM THE OWNER.
9. ALL DIMENSIONS ARE MEASURED TO FINISH CONSTRUCTION UNLESS OTHERWISE NOTED.
10. DRAWINGS ARE NOT TO BE SCALED, NOTIFY THIS OFFICE OF ANY DIMENSIONAL DISCREPANCIES.
11. THE ARCHTECT WILL BE, IN THE FIRST INSTANCE, THE INTERPRETER OF THE REQUIREMENTS OF THE CONTRACT DOCUMENTS. THE ARCHITECT WILL ALSO HAVE THE AUTHORITY TO REJECT WORK WHICH DOES NOT CONFORM TO THE CONTRACT DOCUMENTS.
12. THESE DRAWINGS ARE INTENDED TO PROVIDE COMPLETE FABRICATION AND INSTALLATION OF ALL UNITS DESCRIBED, READY FOR THE OWNER'S USE. THE CONTRACTOR SHALL BE RESPONSIBLE FOR NOTIFYING THE OWNER'S ARCHITECT DURING THE BID PERIOD IF, IN HIS OPINION, ANY UNIT IS INCOMPLETE WITH THE INFORMATION GIVEN HEREIN. FAILURE TO SO NOTIFY THE ARCHITECT SHALL MEAN THE CONTRACTOR UNDERSTANDS THE DOCUMENTS AND THEIR INTENT, AND ALL ITEMS WILL BE COMPLETE IN EVERY DETAIL.
13. THE ARCHITECT WILL MAKE PERIODIC VISITS TO THE SITE TO FAMILIARIZE HIMSELF GENERALLY WITH PROGRESS AND QUALITY OF THE WORK AND TO DETERMINE, IN GENERAL, IF THE WORK IS PROCEEDING IN ACCORDANCE WITH THE CONTRACT DOCUMENTS. ON THE BASIS OF HIS OR HER ON-SITE OBSERVATION AS AN ARCHITECT, HE WILL KEEP THE OWNER INFORMED OF THE PROGRESS OF THE WORK AND WILL ENDEAVOR TO GUARD THE OWNER AGAINST DEFECTS BUT IS NOT RESPONSIBLE FOR CONSTRUCTION MEAN, METHODS, TECHNIQUES, SEQUENCES, PROCEDURES, SAFETY PRECAUTIONS, NOR FOR THE CONTRACTOR'S FAILURE TO CARRY OUT THE WORK IN ACCORDANCE WITH THE CONTRACT DOCUMENTS.
14. THE GENERAL CONTRACTOR SHALL FURNISH AND INSTALL ALL ITEMS SHOWN HEREIN UNLESS SPECIFICALLY NOTED AS BEING FURNISHED BY OTHERS. SHOULD THERE BE ANY QUESTIONS CONCERNING RESPONSIBILITY, THEY SHALL BE SETTLED BEFORE BID SUBMISSION AND CONTRACT SIGNING. NO EXTRA CHARGES WILL BE ALLOWED. THE ARCHITECT WILL NOT BE RESPONSIBLE WHERE CONSTRUCTION DEVIATES FROM THESE DRAWINGS.
15. ALL INSTALLATIONS AFTER CONSTRUCTION SHALL BE ACCURATELY FIELD MEASURED BEFORE FABRICATION.
16. ANY FORM OF DIRECT REPRODUCTION OF THESE DRAWINGS AND DESIGN IN WHOLE OR PART IS PROHIBITED UNLESS AUTHORIZED IN WRITING BY Z + ARCHITECTS .
17. THE CONTRACTOR SHALL FULLY ACQUAINT HIMSELF WITH THE EXISTING CONDITIONS AND SHALL HAVE VISITED AND INSPECTED THE JOB SITE AND BE FULLY INFORMED AS TO THE NATURE OF THE JOB SITE BE FULLY INFORMED AS TO THE NATURE OF EQUIPMENT AND FACILITIES NEEDED FOR THE PROPER EXECUTION OF THE WORK. STARTING OF DEMOLITION AND REMOVAL OPERATIONS WILL BE CONSTRUED AS EVIDENCE THAT THE CONTRACTOR HAS COMPLIED WITH THESE REQUIREMENTS: ANY LATER CLAIMS FOR DIFFICULTIES ENCOUNTERED, WHICH COULD HAVE BEEN FORESEEN, WILL NOT BE RECOGNIZED.
18. VERIFY ALL EXISTING ELEVATIONS, CONDITIONS AND DIMENSIONS AT THE SITE, AGAINST THE DRAWINGS, AND INFORM THE ARCHITECT OF ANY DISCREPANCIES PRIOR TO COMMENCING WITH WORK AND SUBMISSION OF ANY SHOP DRAWINGS.
19. ALL WORK, WHETHER SHOWN OR IMPLIED, UNLESS SPECIFICALLY QUESTIONED, SHALL BE CONSIDERED FULLY UNDERSTOOD IN ALL RESPECTS BY THE CONTRACTOR. THE CONTRACTOR WILL BE HELD RESPONSIBLE FOR ANY MISINTERPRETATIONS AND/OR CONSEQUENCES THEREOF, FOR ALL WORK ON ALL DRAWINGS.
20. CONTRACTOR SHALL FOLLOW ACCEPTED TRADE PROCEDURES AND MANUFACTURER'S STANDARDS AND SHALL PRODUCE THE PROJECT IN A GOOD AND WORKMANLIKE MANNER. ALL MATERIALS ARE TO BE NEW, UNLESS OTHERWISE NOTED IN THE DRAWINGS: AND CONTRACTOR SHALL NOT SUBSTITUTE ANY STRUCTURAL GRADE MATERIALS WITHOUT PRIOR WRITTEN APPROVAL FROM THE ARCHITECT.
21. THE CONTRACTOR AND ALL RESPECTIVE TRADES SHALL GIVE THEIR PERSONAL SUPERINTENDENCE TO THE WORK AND SHALL FURNISH ALL LABOR, MATERIALS, TRANSPORTATION, APPARATUS AND EQUIPMENT REQUIRED FOR A COMPLETE INSTALLATION. THE CONTRACTORS SHALL INSTALL ALL MATERIALS IN A MANNER SUBJECT TO APPROVAL OF THE OWNER AND THE ARCHITECT.
22. THE CONTRACTORS SHALL LEAVE THE PREMISES IN A NEAT, CLEAN AND SAFE CONDITION AT THE COMPLETION OF WORK EACH DAY.
23. ALL CONDITIONS WHICH OCCUR AND WHICH ARE NOT IN CONFORMANCE WITH THESE SPECIFICATIONS AND ADJACENT DRAWINGS SHALL BE BROUGHT TO THE IMMEDIATE ATTENTION OF THE ARCHITECT FOR PROMPT RESOLUTION. FAILURE TO DO SUCH SHALL BE THE SOLE RESPONSIBILITY OF THE CONTRACTOR.
24. NO MATERIAL SUBSTITUTIONS SHALL BE MADE. THE ARCHITECT WILL CONSIDER MATERIAL CHANGE REQUESTS ON AN INDIVIDUAL BASIS. CONTRACTOR SHALL SUBMIT SAMPLES AND CUTS FOR WRITTEN APPROVAL BY THE ARCHITECT PRIOR TOTE START OF ANY WORK.
25. THE CONTRACTOR SHALL BE RESPONSIBLE FOR COORDINATION OF WORK AND ESTABLISHING SCHEDULES FOR ALL TRADES. HE SHALL AFFORD OTHER SUB-CONTRACTORS REASONABLE OPPORTUNITY FOR THE INTRODUCTION AND STORAGE OF THEIR MATERIALS AND EQUIPMENT AND THE EXECUTION OF THEIR WORK.
26. ALL MANUFACTURED ARTICLES, MATERIALS AND EQUIPMENT SHALL BE INSTALLED, CONNECTED, ERECTED, USED, CLEANED AND CONDITIONED AS DIRECTED BY THE MANUFACTURER, UNLESS OTHERWISE SPECIFIED ON THE DRAWINGS.
27. EACH SUBTRADE WILL BE RESPONSIBLE FOR REVIEWING THE ENTIRE SET OF DRAWINGS AND NOTING HIS WORK AS APPLICABLE. WORK INDICATED OR INFERRED ON THE DRAWINGS WILL BE DEEMED AND INCLUDED IN SUB-CONTRACTOR'S COSTS.
28. THE CONTRACTOR SHALL SUBMIT, IN WRITING, ALL PROPOSALS FOR ADDITIONAL WORK TO THE ARCHITECT'S OFFICE FOR REVIEW AND APPROVAL. NO WORK IS TO PROCEED UNTIL A SIGNED PROPOSAL IS RETURNED TO THE GENERAL CONTRACTOR.
29. PERMITS: THE CONTRACTOR WILL SECURE REQUIRED BUILDING PERMITS PRIOR TO START OF WORK. INDIVIDUAL SUBCONTRACTORS ARE TO SECURE NECESSARY PERMITS PRIOR TO START OF THEIR RESPECTIVE WORK.
30. TEMPORARY PROTECTION: PARTICULAR ATTENTION SHALL BE GIVEN TO THE PROTECTION OF EXISTING STRUCTURE AND FINISHES SO AS TO PREVENT ANY DAMAGE OF EXISTING FINISHES NOT DESIGNATED FOR DEMOLITION. PROVIDE ALL NECESSARY, TEMPORARY CONSTRUCTION AND DUSTPROOF PROTECTION. PROTECTIONS SHALL BE IN COMPLIANCE WITH BUILDING STANDARDS. TYPE AND LOCATION OF PROTECTION SHALL BE REVIEWED WITH OWNER PRIOR TO COMMENCING WORK. CONTRACTOR SHALL FULLY BRACE AND OTHERWISE PROTECT ALL WORK IN PROGRESS UNTIL THE BUILDING IS COMPLETED.
31. ANY EXISTING WORK DAMAGED BY THE CONTRACTOR OR SUB-CONTRACTORS SHALL BE RETURNED TO ITS ORIGINAL CONDITION AT THE CONCLUSION OF THE PROJECT, AT NO ADDITIONAL COST TO THE OWNER.
32. IT IS THE RESPONSIBILITY OF THE CONTRACTOR & IT'S SUB-CONTRACTORS TO KEEP THE BUILDING WEATHERTIGHT AND MAINTAIN ALL BARRICADES, SHORING, BRACING AND OTHER SAFETY MEASURES REQUIRED TO PROTECT THE BUILDING, WORKMEN AND THE PUBLIC.
33. CLEAN-UP: ALL MATERIALS DEMOLISHED, EXCEPT AS INDICATED ON THE DRAWINGS TO BE SALVAGED, SHALL BECOME THE PROPERTY OF THE CONTRACTOR AND SHALL BE REMOVED AND DISPOSED OF, OFF THE SITE WITH SUCH DILIGENCE AS TO CAUSE NO INTERFERENCE WITH HOME OWNERS DAILY ROUTINE, OR ANY UNSIGHTLY ACCUMULATION OF DEBRIS CONSTRUCTION DEBRIS SHALL BE REMOVED DAILY.
34. UPON COMPLETION OF ALL DEMOLITION AND REMOVAL WORK, REMOVE ALL TOOLS AND APPARATUS FROM THE PREMISES. REMOVE FROM THE AREA OF WORK ALL DEMOLISHED MATERIAL NOT DESIGNATED FOR RE-USE. REMOVE ALL TEMPORARY SHORING, BRACING, LINTELS PROTECTION, ETC., AS DIRECTED. LEAVE THE AREA OF WORK, BROOM-CLEAN, NEAT AND ORDERLY, TO THE SATISFACTION OF THE OWNER. STORAGE OF MATERIALS SHALL NOT INTERFERE WITH THE MEANS OF EGRESS OF THE EXISTING CORRIDOR SPACES.
35. THE CONTRACTOR SHALL OBTAIN AND PAY FOR COMPREHENSIVE LIABILITY INSURANCE COVERING THE ENTIRE WORK AND COMPENSATION INSURANCE, IN ACCORDANCE WITH APPLICABLE CURRENT LAWS, PRIOR TO THE COMMENCEMENT OF THE WORK. THE SUB-CONTRACTOR SHALL SUBMIT TO THE CONTRACTOR COPIES OF ALL REQUIRED CERTIFICATES OF INSURANCE.
36. 013000 ADMINISTRATIVE REQUIREMENTS SPECIFICATIONS INDICATED WHICH SHOP DRAWINGS OF FABRICATED WORK SHALL BE SUBMITTED. IF CORRECTIONS ARE REQUIRED, THIS PROCEDURE SHALL BE FOLLOWED FOR SUBSEQUENT SUBMISSIONS UNTIL FINAL APPROVAL.
37. G.C. TO COORDINATE DELIVERY OF MILLWORK / CABINETRY OR CASEWORK WITH SUB-CONTRACTOR WHERE CASEWORK IS BEING INSTALLED, ROOM SHALL BE SUBSTANTIALLY COMPLETED, TYP.
38. ALL COLOR SELECTIONS SHALL BE MADE AND COORDINATED THROUGH THE OFFICE OF THE ARCHITECT, EXCEPT AS OTHERWISE DIRECTED BY THE OWNER. COLOR: UNLESS THE PRECISE COLOR AND PATTERN IS SPECIFICALLY DESCRIBED IN THE CONTRACT DOCUMENTS, WHENEVER A CHOICE OF COLOR OR PATTERN IS AVAILABLE IN A SPECIFIED PRODUCT, SUBMIT ACCURATE COLOR CHARTS AND PATTERN CHARTS TO THE ARCHITECT FOR HIS REVIEW AND SELECTION.
39. THE CONTRACTOR SHALL SUBMIT THE SAMPLES IN SUFFICIENT TIME TO PERMIT CHECKING, RESUBMISSION, RECHECKING, APPROVAL FABRICATION AND DELIVERY. FAILURE TO DO SO WILL NOT JUSTIFY A DELAY IN THE TIME OF COMPLETION OF WORK.
40. DETAILS SHOWN IN ANY SECTION APPLY TO ALL SIMILAR SECTIONS UNLESS OTHERWISE NOTED.
41. WHEN CERTAIN ITEMS OF EQUIPMENT, APPLIANCES AND / OR FIXTURES ARE INDICATED AS "NIC" (NOT IN CONTRACT) OR TO BE FURNISHED AND INSTALLED UNDER OTHER CONTRACTS, ANY REQUIREMENTS FOR PREPARATION OF OPENINGS, PROVISION OF BACKING, ETC.,, FOR RECEIPT OF SUCH "NIC" WORK, SHALL BE PROVIDED TO THE GENERAL CONTRACTOR, WHO SHALL PROPERLY FORM AND OTHERWISE PREPARE HIS WORK IN A SATISFACTORY MANNER TO RECEIVE SUCH "NIC" WORK.
42. IT WILL BE THE GENERAL CONTRACTOR'S RESPONSIBILITY TO SEE THAT THE BUILDING AREAS ARE MADE READY TO RECEIVE AND INSTALL THE OWNER'S FIXTURES AND/OR APPLIANCES, IN ACCORDANCE WITH THE DELIVERY SCHEDULE AND SPECIFIC REQUIREMENTS FURNISHED. FAILURE TO MEET THE SCHEDULE ON ITEMS OF THE OWNER-FURNISHED EQUIPMENT WILL BE CONSIDERED AS IMPORTANT TO THE COMPLETION SCHEDULE AS ANY OTHER PART OF THE WORK.
44. ALL CUTTING AND PATCHING OF OPENINGS SHALL BE POINTED UP, AND SURFACE REPAIRED FOR AN AIRTIGHT SEAL.ALL EXISTING WALL FINISHES OR EQUIPMENT, APPLIANCES FIXTURES, ETC. WHICH ARE DISTURBED DURING CONSTRUCTION AND PROVE NOT TO BE NECESSARY AND NOT BE SPECIFICALLY INDICATED "TO REMAIN", SHALL BE REMOVED, PATCHED, REPAIRED OR COVERED. EITHER AS INDICATED ON THE PLANS OR TO CREATE A FLUSH, UNIFORM SURFACE HAVING THE INTEGRITY OF SUCH.
45. ALL SUBSTRATES SHALL BE PREP AS PER FINISH MANUFACTURE SPECIFICATIONS, TYP.
46. ALIGNMENT OF NEW CONSTRUCTION TO EXISTING WALLS AND COLUMNS SHALL BE DONE IN A MANNER AS TO VISIBLY ELIMINATE THE POINT OF CONTACT OR JOINT OF NEW AND EXISTING MATERIALS. NEW CONSTRUCTION SHALL BE FLUSHED WITH EXISTING.
47. PATCH ALL FLOOR AND WALL CRACKS AND SURFACE IRREGULARITIES AS REQUIRED, PRIOR TO FINISH INSTALLATION SHOWN. FLASH PATCH AREAS AS REQUIRED TO PROVIDE A SMOOTH FLUSH SURFACE FOR SAME.
48. ALL INFILL PATCHING SHALL BE FURRED OUT AS REQUIRED AND FINISHED FLUSH WITH EXISTING.
49. THE GENERAL CONTRACTOR SHALL PATCH ALL CUTTING BY MECHANICAL AND ELECTRICAL TRADES AND ALL ADDITIONAL CUTTING BY OTHERS. COORDINATE THE WORK PRIOR TO THESE TRADES PROCEEDING. NO EXTRAS WILL BE ALLOWED. DUE TO FAILURE TO COORDINATE SUCH, OR PROCEEDING WITH WORK THAT COULD HAVE BEEN AVOID WITH SUCH/PROPER PLANNING. REQUIRED.
50. HEAT DETECTORS, SMOKE DETECTROS AND CARBON MONOXIDE ARE TO BE PROVIDED WHERE SHOWN AND INSTALLED IN STRICT ACCORDANCE WITH MANUFACTURER'S ACTUAL INSTRUCTIONS AND APPLICABLE CODE(S).
51. FIRE ALARM AND EMERGENCY LIGHTING ARE TO BE PROVIDED, MEETING ALL CODE REQUIREMENTS. ALL EXIT AREAS SHALL BE PROPERLY IDENTIFIED AND SUPPLIED WITH EMERGENCY EXIT LIGHTING TO MAINTAIN A MINIMUM OF ONE (1) FOOTCANDLE IN ACCORDANCE WITH LOCAL CODE.
52. THE ELECTRICAL OUTLETS AND PLUMBING SHOWN ON THE ARCHITECTURAL DRAWING ARE ONLY THOSE WHICH HELP TO CLARIFY THE SUGGESTED FUNCTIONAL PATTERNS OF THE ROOMS. IN ALL CASES THE CONTRACTOR SHALL REFER TO THE MECHANICAL AND ELECTRICAL DRAWINGS FOR THE COMPLETE LAYOUT OF EACH RESPECTIVE SERVICE. IN ALL CASES, OR IN THE EVENT OF A CONFLICT, THE ARCHITECTURAL DRAWINGS SHALL TAKE PRECEDENCE.
53. PROVIDE NEW ELECTRICAL WIRING/LIGHTING AS CLOSE AS POSSIBLE TO LAYOUTS SHOWN ON PLANS, UNLESS OTHERWISE DIRECTED BY ARCHITECT ELECTRICAL WIRING AND DEVICES TO MEET ALL CODE REQUIREMENTS. SUB-CONTRACTOR TO PROVIDE ALL HOOKUPS TO EXISTING, AS REQUIRED AFTER VERIFYING IF MAIN SERVICE IS SUFFICIENT TO CARRY INCREASED LOAD. REPLACE AS REQUIRED AND /OR UPGRADE IF NOT ADEQUATE.
54. NEW WORK IS TO MEET OR EXCEED ALL APPLICABLE NATIONAL AND LOCAL CODE FOR ENERGY, ELECTRICAL, PLUMBING, MECHANICAL, AND FIRE, OSHA (WHERE APPLICABLE), AND ALL UL REQUIREMENTS. THE MOST RECENT PUBLICATION DATE OF ALL AFOREMENTIONED CODES SHALL APPLY.
55. GUARANTEES: ALL MATERIALS AND WORKMANSHIP SHALL BE GUARANTEED FOR A PERIOD OF ONE (1) YEAR FROM THE DATE OF FINAL ACCEPTANCE, UNLESS SPECIFIED OTHERWISE FOR A LONGER PERIOD OF TIME FOR SPECIFIC ITEMS. EACH SUB-CONTRACTOR SHALL BE RESPONSIBLE FOR ALL COSTS INCIDENTAL THERETO. INCLUDING DAMAGE TO OTHER WORK, FURNISHINGS OR EQUIPMENT IF THE SUB-CONTRACTOR, AFTER NOTICE IN WRITING FROM THE CM AND ARCHITECT, FAILS TO PROCEED PROMPTLY TO COMPLY WITH THE TERMS OF THE GUARANTEE. THE OM MAY HAVE THE DEFECTS CORRECTED AND THE SUB-CONTRACTOR WILL BE RESPONSIBLE FOR ALL EXPENSES INCURRED.
56. A CONTRACTOR MAKING A BID FOR WORK ON THIS PROJECT IS MADE AWARE BY THIS NOTE THAT IT IS THE INTENT OF THE OWNER TO HAVE A COMPLETELY INSTALLED JOB. THE CONTRACTOR MAKING A BID FOR THIS WORK FOR EQUIPMENT, APPLIANCES, FIXTURES, ETC, SHOWN AND / OR DETAILED ON ANY PROJECT DRAWINGS OR SPECIFICATIONS AND NOT JUST THOSE COMMONLY REFERRED TO AS A SINGLE TRADE DRAWING UNLESS SPECIFICALLY IDENTIFIED ELSEWHERE AS WORK OF OTHER TRADES.
57. ACCEPTANCE OF BID WILL BE CONSTRUED AS EVIDENCE THAT THE SUB-CONTRACTOR HAS COMPLIED WITH ALL REQUIREMENTS STATED ABOVE.
58. ALL WORK SHALL CONFORM TO THE REQUIREMENTS OF THE LOCAL AUTHORITY HAVING JURISDICTION, AND THE BEST TRADE PRACTICES.
59. BEFORE COMMENCING WORK, THE CONTRACTOR SHALL FILE ALL REQUIRED INSURANCE CERTIFICATES WITH THE DEPARTMENT OF BUILDING, OBTAIN ALL REQUIRED PERMITS, AND PAY ALL FEES REQUIRED BY LOCAL JURISDICTION.
60. G.C. TO SUPPLY TRANSITION STRIP AT ALL LOCATIONS WHERE FLOORING FINISH CHANGES. ALL TRANSITION STRIPS ARE TO BE APPROVED BY ARCHITECT PRIOR TO ORDERING.
61. ALL FINISHES TO BE INSTALLED AS PER MANUFACTURERS RECOMMENDATIONS.
62. ALL WALLS THROUGHOUT TO RECEIVE (1) COAT OF PRIMER AND (2) COATS OF SPECIFIED PAINT. REFERENCE FINISH SCHEDULE FOR MORE INFORMATION.
63. ALL FLOORING MATERIAL TO RUN UNDER MILLWORK ITEMS, UNLESS NOTED OTHERWISE.
64. ALL CARPET TO BE INSTALLED AS PER FINISH SCHEDULE. COORDINATE WITH ARCHITECT FOR START POINT AND DIRECTION PRIOR TO INSTALLATION.
65. AT ANY EDGE WHERE RAW TILE IS EXPOSED, G.C. TO INSTALL METAL TRANSITION STRIP. SEE FINISH SCHEDULE FOR MORE INFORMATION.
66. G.C. TO COORDINATE ALL APPLIANCES WITH MILLWORK PRIOR TO ORDER AND SHOP DRAWINGS. REFERENCE APPLIANCE SCHEDULE FOR MORE INFORMATION.
67. VERIFY FINAL LOCATION OF ALL LIGHT FIXTURES.
68. G.C. IS TO FIRE PROOF ALL PENETRATIONS THROUGH RATED WALLS AND FLOORS DUE TO PIPING, CONDUIT, DUCTWORK, ETC. PROVIDE RATING AS REQUIRED, TYP.
69. G.C. TO PATCH, REPAIR, AND PREPARE ALL DAMAGED OR UNLEVEL FLOOR AREAS TO RECEIVE NEW FLOOR FINISH. COORDINATE TREATMENT OF EXISTING SURFACE WITH FINAL FINISH. REFERENCE INTERIOR ELEVATIONS AND FINISH SCHEDULE FOR MORE INFORMATION.
70. STAGING AREAS FOR DEMOLITION AND DEBRIS REMOVAL SHALL BE COORDINATED WITH THE OWNER.
71. CONTRACTOR TO PROVIDE LINTELS AT ALL NEW MASONRY OPENING. REFERENCE STRUCTURAL DRAWINGS FOR SIZING.
72. ALL JOINTS BETWEEN DISSIMILAR MATERIALS SHALL BE CAULKED WHERE REQUIRED PROVIDE CLOSED CELL BACKER ROD AND CAULK WHERE DISSIMILAR MATERIALS COME INTO DIRECT CONTACT WITH EACH OTHER, PROVIDE A BOND BREAK.
73. THE CONTRACTORS SHALL FOLLOW ACCEPTED TRADE PROCEDURES AND MANUFACTURER'S STANDARDS AND SHALL PRODUCE THE PROJECT IN A GOOD AND WORKMANLIKE MANNER. ALL MATERIALS ARE TO BE NEW UNLESS OTHERWISE NOTED IN THE DRAWINGS. THE CONTRACTOR SHALL NOT SUBSTITUTE ANY STRUCTURAL GRADE MATERIALS WITHOUT PRIOR WRITTEN APPROVAL FROM THE ARCHITECT.
74. ALL TAGGED DETAILS ARE TYPICAL FOR THE ITEM OR SYSTEM INDICATED. THE SCOPE OF WORK INDICATED AS PART OF THE TAG OR DETAIL MARK SHALL APPLY TO ALL OTHER SIMILAR SYMBOLS OR ITEMS.
75. THE TERM "TYP." FOLLOWING A NOTE, TAG, OR DETAIL FLAG INDICATES THAT ALL LIKE, SIMILAR, OR INDICATED ITEMS SHALL BE PROVIDED WITH THE SPECIFIED DETAIL, NOTE, OR SPECIFICATION.
76. ALL WORK, WHETHER SHOWN OR IMPLIED, UNLESS SPECIFICALLY QUESTIONED, SHALL BE CONSIDERED FULLY UNDERSTOOD IN ALL RESPECTS BY THE CONTRACTOR. THE CONTRACTOR WILL BE HELD RESPONSIBLE FOR ANY MISINTERPRETATIONS AND/OR CONSEQUENCES THEREOF, FOR ALL WORK ON ALL DRAWINGS.
77. ALL MANUFACTURED ARTICLES, MATERIALS , AND EQUIPMENT SHALL BE SUPPLIED, INSTALLED, CONNECTED, ERECTED, USED, CLEANED AND CONDITIONED AS DIRECTED BY THE MANUFACTURER, UNLESS OTHERWISE SPECIFIED ON THE DRAWINGS.
78. ALL SITE WORK AND LANDSCAPING IS TO BE ESTABLISHED AND DESIGNED BY OTHERS. UNLESS SHOWN ON THESE DRAWINGS, ALL MECHANICAL WORK, SUCH AS, BUT NOT LIMITED TO, ELECTRICAL, PLUMBING, HEATING, AIR CONDITIONING ,VENTILATING, ETC., ARE TO BE ESTABLISHED AND DESIGNED BY OTHERS.
79. ALL PATIOS AND PORCHES TO BE SLOPED 1/8" PER 1'-0" IN DIRECTION INDICATED ON THE PLANS, OR CALL ARCHITECT FOR MORE INFORMATION ON SLOPE DIRECTION.
80. ALL OPENINGS IN PARTITIONS OR BLOCK WALLS INCLUDING, BUT NOT LIMITED TO, DUCTWORK, PENETRATIONS, DOOR OPENINGS, ETC. SHALL BE SUPPORTED BY STEEL LINTEL UNLESS OTHERWISE INDICATED. CONTRACTOR IS TO FURNISH AND INSTALL ALL ANGLES, STRUTS, BRACKETS, TOGGLES, EYE BOLTS, ETC. WHEREVER NECESSARY TO PROPERLY SUPPORT, BRACE OR REINFORCE ALL FINISHES, FRAMES, EQUIPMENT, ETC.
81. THE CONTRACTOR SHALL APPLY ALL FEES, GIVE ALL NOTICES, FILE ALL NECESSARY DRAWINGS AND OBTAIN ALL PERMITS AND CERTIFICATES OF APPROVAL REQUIRED IN CONNECTION WITH ALL WORK UNDER THESE CONTRACT DOCUMENTS. HE SHALL COMPLY WITH ALL LAWS, ORDINANCES, RULES AND REGULATIONS HAVING JURISDICTION.
82. ALL ROOF EGGSHELL HAVE ICE AND WATER SHIELD EXTENDING FROM BUILDING EDGE TO 36" OVER HEATED SPACE BELOW.
83. ALL EXPOSED MATERIALS FOR PORCHES, SOFFITS, OVERHANGS,ETC TO BE APPROVED EXTERIOR GRADE MATERIALS.
84. THERE SHALL BE AN EXHAUST FAN IN EVERY BATHROOM, VENTED MECHANICALLY TO THE EXTERIOR. PROVIDE AND INSTALL PANASONIC WHISPER FAN OR APPROVED EQUAL.
85. ALL DRYER VENTS SHALL BE CONNECTED TO THE OUTSIDE.
86. DESIGN LOADS DO NOT INCLUDE SUPERIMPOSED LOADS SUCH AS A/C UNITS AND OTHER MECHANICAL EQUIPMENT. SHOP DRAWINGS OF EQUIPMENT AND PROPOSED SUPPORT FRAMING SHALL BE SUBMITTED TO ARCHITECT FOR APPROVAL.
87. ALL CHIMNEYS SHALL TERMINATE 2'-0" MINIMUM DISTANCE ABOVE A POINT MEASURED 10'-0" HORIZONTALLY FROM THE NEAREST BUILDING OR ROOF.
88. ALL FRAMING TO BE IN CONFORMANCE WITH THE NATIONAL FOREST PRODUCTS, "MANUAL FOR HOUSE FRAMING"
89. CONTINUOUS BEARING FROM POINT OF LOAD TO FOUNDATION SHALL BE PROVIDED BY MEANS OF COLUMNS AND SOLID BLOCKING AT FLOORS.
90. CEMENT BACKER BOARD SHALL BE USED WITH BATHTUB AND SHOWER COMPARTMENTS, U.O.N. PROVIDE FULL HEIGHT CONTINUOUS WATER PROOFING, NO EXCEPTIONS, TYP.
91. FIRESTOP ALL WALLS AT 9'-0" HEIGHT VERTICALLY.
92. ALL GLASS SHALL BE TEMPERED GLASS IN THE FOLLOWING AREAS:
    - A. GLAZING IN DOORS & ENCLOSURES FOR BATHTUBS & SHOWERS
    - B. GLAZING IN ANY PART OF A BUILDING WALL ENCLOSING BATHTUBS AND SHOWERS WHERE THE BOTTOM EXPOSED EDGE OF THE GLAZING IS LESS THAN 60" ABOVE WALKING SURFACE
    - C. GLAZING IN WALLS ENCLOSING STAIRWAY LANDINGS OR WITHIN 60" OF THE TOP & BOTTOM OF STAIRWAYS WHERE THE BOTTOM EDGE OF THE GLASS IS LESS THAN 60" ABOVE THE WALKING SURFACE.
93. G.C. SHALL COORDINATE ALL APPLIANCE AND PLUMBING SPECS W/ HOMEOWNER'S FINAL SELECTIONS AND APPROPRIATE CONTRACTOR.

Z+ ARCHITECTS LLC
240 WEST CRESCENT AVENUE
ALLENDALE, NJ 07401
TEL: 201.785.8855
www.zplusarchitects.com

PROJECT TEAM:

CIVIL
SCHWANEWEDE, HALS, & VINCE
111 LITTLETON RD #200
PARSIPPANY-TROY HILLS, NJ
201-337-0053

seal:

Michael Scro
NJ LIC# 18626

BALIWALA

10 BIRCH LANE, WALDWICK, NJ
City, State Zip

Copyright © 2019 , Z+ Architect, LLC

All dimensions and existing conditions shall be checked & verified by the contractor before proceeding with the work

REV	DATE	DESCRIPTION

SHEET TITLE:

GENERAL NOTES

DESIGN DELIVERABLE: PERMIT SET

ISSUE DATE: 06/23/25

PROJECT #: 2508

DRAWN BY: AR

CHECKED BY: MS

SHEET NUMBER: **G-6**

REVIT 2020

ABBREVIATIONS LEGEND

ABBREVIATIONS WHEN USED IN COMPOSITION MAY INCLUDE PERIODS FOR CLARIFICATION

AB	ANCHOR BOLT
A/C	AIR CONDITION(ING)(ED)
ACS PNL	ACCESS PANEL
ACST	ACOUSTIC(AL)
AD	AREA DRAIN
ADH	ADHESIVE
ADJ	ADJUSTABLE
AFF	ABOVE FINISHED FLOOR
AGGR	AGGREGATE
AHR	ANCHOR
ALT	ALTERNATE
ANOD	ANODIZE(D)
APPROX	APPROXIMATE
ARC	ARCHITECTURAL CAST CONCRETE
ARCH	ARCHITECT(URAL), ARCHITECT
ASPH	ASPHALT
B BD	BASE BOARD
BD	BOARD
BITUM	BITUMINOUS
BLDG	BUILDING
BLK	BLOCK
BLKG	BLOCKING
BM	BEAM
BOT	BOTTOM
BOT/	BOTTOM OF
BR (BR-)	BRICK
BRG	BEARING
BSMT	BASEMENT
BUR	BUILT-UP ROOFING
CAB	CABINET
CB	CATCH BASIN
CEM	CEMENT
CFS	CONCRETE FLOOR SEALER
CH (CH-)	COAT HOOK
CIP	CAST-IN-PLACE
CJ	CONTROL JOINT
CL	CENTER LINE
CLG	CEILING
CLO	CLOSET
CLR	CLEAR
CMU	CONCRETE MASONRY UNIT
COL	COLUMN
CONC	CONCRETE
CONSTR	CONSTRUCTION
CONT	CONTINUOUS
CONTR	CONTRACTOR
COORD	COORDINATE
CORR	CORRIDOR
CPT (CPT-)	CARPET
CSK	COUNTERSUNK
CT (CT-)	CERAMIC TILE
CTR	CENTER
CU	CUBIC
CW	COLD WATER
D	DEEP, DEPTH
DBL	DOUBLE
DEG	DEGREE
DEMO	DEMOLISH, DEMOLITION
DET	DETAIL
DIA	DIAMETER
DIAG	DIAGONAL
DIFF	DIFFUSER
DIM	DIMENSION
DL	DEAD LOAD
DN	DOWN
DR	DOOR
DS	DOWNSPOUT
DW	DISHWATER
DWG	DRAWING
DWV	DRAINAGE, WASTE AND VENT
E	EAST
EA	EACH
EIFS	EXTERIOR INSULATION AND FINISH SYSTEM
EJ	EXPANSION JOINT
EL	ELEVATION
ELAST	ELASTOMERIC
ELEC	ELECTRIC(AL)
ELEV	ELEVATOR
ENCL	ENCLOSURE
ENGR	ENGINEER
ENTR	ENTRANCE
EO	ELECTRIC OUTLET
EOS	EDGE OF SLAB
EP	ELECTRICAL PANEL
EQ	EQUAL, EQUIVALENT
EQUIP (EQUIP_)	EQUIPMENT
EXC	EXCAVATION, EXCAVATE
EXH	EXHAUST
EXIST	EXISTING
EXP	EXPANSION
EXPO	EXPOSED
EXT	EXTERIOR, EXTERNAL
F/	FACE OF
FAB (FAB-)	FABRIC
FABR	FABRICATE(D)
FD	FLOOR DRAIN
FDTN	FOUNDATION
FF	FINISHED FLOOR
FIN	FINISH(ED)
FIXT	FIXTURE
FL	FLASHING
FLEX	FLEXIBLE
FLR (FLR_)	FLOOR, FLOORING
FO	FINISHED OPENING
FP	FIRE PROOFING
FT	FOOT (FEET)
FTG	FOOTING
FTR	FINNED TUBE RADIATION
FURN	FURNISH, FURNITURE
FURG	FURRING
GA	GAUGE
GALV	GALVANIZED
GEN	GENERAL
GL (GL-)	GLASS
GD	GROUND
GFMU	GROUND FACE MASONRY UNIT
GLU LAM	GLUE LAMINATED WOOD
GR	GRADE
GWB	GYPSUM WALL BOARD
GWT	GLAZED WALL TILE
GYP	GYPSUM
H	HIGH
HB	HOSE BIBB
HDW	HARDWARE
HDWD	HARDWOOD
HORIZ	HORIZONTAL
HP	HIGH POINT
HT	HEIGHT
HTG	HEATING
HTR	HEATER
HVAC	HEATING, VENTILATION, AIR CONDITIONING
HW	HOT WATER
ID	INSIDE DIAMETER
IN	INCH(ES)
INS (INSUL-)	INSULATION
INT	INTERIOR
INV	INVERT
JT	JOINT
KIT	KITCHEN
LAM	LAMINATE(D)
LAQ	LAQUER
LB(S)	POUND(S)
LF	LINEAR FOOT, (FEET)
LL	LIVE LOAD
LP	LOW POINT
LT(S)	LIGHT(S)
LTG	LIGHTING
LVL	LEVEL
m	METER
MAS	MASONRY
MAX	MAXIMUM
MDF	MEDIUM DENSITY FIBERBOARD
MECH	MECHANICAL
MEMB	MEMBRANE
MEZZ	MEZZANINE
MEP	MECHANICAL, ELECTRICAL, PLUMBING
MFR	MANUFACTURER
MIN	MINIMUM
MIRR (MIRR-)	MIRROR
MISC	MISCELLANEOUS
MO	MASONRY OPENING
MTD	MOUNTED
MTG	MEETING
MTL	METAL
MULL	MULLION
MVBL	MOVABLE
N	NORTH
N/A	NOT APPLICABLE
NIC	NOT IN CONTRACT
NO	NUMBER
NOM	NOMINAL
NTS	NOT TO SCALE
O/O	OUT TO OUT
OA	OVERALL
OC	ON CENTER
OD	OUTSIDE DIAMETER
OF/CI	OWNER FURNISHED, CONTRACTOR INSTALLED
OF/OI	OWNER FURNISHED, OWNER INSTALLED
OFF	OFFICE
OH	OVERHEAD
OPH	OPPOSITE HAND
OPNG	OPENING
OPP	OPPOSITE
PAV	PAVER
PBD	PARTICLE BOARD
PC	PRE-CAST
PCC (PCC-)	PRE-CAST CONCRETE
PERF	PERFORATED
PERP	PERPENDICULAR
PL	PLATE
PLAM (PLAM-)	PLASTIC LAMINATE
PLA	PLASTER
PLBG	PLUMBING
PLYWD	PLYWOOD
PNL	PANEL
POL	POLISHED
PR	PAIR
PREFAB	PREFABRICATE(D)
PROP	PROPERTY
PSF	POUNDS PER SQUARE FOOT
PSI	POUNDS PER SQUARE INCH
PT	PAINT
PTD (PTD-)	PAPER TOWEL DISPENSER
PTN	PARTITION
PVG	PAVING
QT (QT-)	QUARRY TILE
QTY	QUANTITY
r	RISER
R	THERMAL RESISTANCE
RAD	RADIUS
RB (RB-)	RESILIENT BASE
	REFLECTED CEILING PLAN
RD	ROOF DRAIN
REC	RECESSED
REF	REFERENCE
REFR	REFRIGERATOR
REINF	REINFORCE, REINFORCING
REQD	REQUIRED
RESIL	RESILIENT
REV	REVISION
RFG	ROOFING
RF (RF-)	RESILIENT FLOORING
RH	RIGHT HAND
RM	ROOM
RO	ROUGH OPENING
RS	ROOFING SYSTEMS
RTF (RTF-)	RUBBER TILE FLOOR
RUB	RUBBER
RVL	REVEAL
S	SOUTH
SAB	SOUND ATTENUATION BATTS
SAN	SANITARY
SC	SOLID CORE
SCHED	SCHEDULE
SE	SEALANT
SECT	SECTION
SF	SQUARE FOOT(FEET)
SGL	SINGLE
SHR	SHOWER
SHT	SHEET
SIM	SIMILAR
(SNDU-)	DISPOSAL UNIT
SPEC	SPECIFICATION
SPKR	SPEAKER
SQ	SQUARE
SSM (SSM-)	SOLID SURFACE MATERIAL
SST	STAINLESS STEEL
ST	STONE
STC	SOUND TRANSMISSION CLASS
STD	STANDARD
STL	STEEL
STN (STN-)	STONE
STOR	STORAGE
STRUCT	STRUCTURE, STRUCTURAL
SUSP	SUSPENDED
SV (SV-)	SHEET VINYL
SYMM	SYMMETRICAL
t	TREAD
T/	TOP OF
T&B	TOP & BOTTOM
T&G	TONGUE & GROOVE
TEMP	TEMPORARY
TER (TER-)	TERRAZZO
THK	THICK
THRES	THRESHOLD
TLT	TOILET
TMPD	TEMPERED
TOPO	TOPOGRAPHY, TOPOGRAPHIC
TRTD	TREATED
TS	TUBE STEEL
TYP	TYPICAL
UC	UNDER CABINET
UCL (UCL-)	UNDER CABINET LIGHTING
UGND	UNDERGROUND
UL	UNDERWRITER'S LABORATORIES
UNEXC	UNEXCAVATED
UNFIN	UNFINISHED
UNO	UNLESS NOTED OTHERWISE
UON	UNLESS NOTED OTHERWISE
US	UNDERSLAB
UTIL	UTILITY
VB (VB-)	VINYL BASE
VCT (VCT-)	VINYL COMPOSITION TILE
VENT	VENTILATION
VERT	VERTICAL
VEST	VESTIBULE
VIF	VERIFY IN FIELD
VOL	VOLUME
VNR (VNR-)	VENEER
VR	VAPOR RETARDER
VT (VT-)	VINYL TILE
VWC (VWC-)	VINYL WALL COVERING
W	WEST
W/	WITH
W/O	WITHOUT
WB	WOOD BASE
WCV	WALL COVERING
WD (WD-)	WOOD
WDFL	WOOD FLOOR
WG (WG-)	WALL GUARD
WF	WIDE FLANGE
WH	WATER HEATER
WI	WROUGHT IRON
WIN	WINDOW
WP	WATERPROOFING
WPS	WATERPROOFING SYSTEMS
W RECPT	WASTE RECEPTACLE
WSCT	WAINSCOT
WT	WINDOW TREATMENT
WV	WOOD VENEER
WWF	WELDED WIRE FABRIC
YD	YARD
ZN	ZINC.

MATERIALS

- COMPACTED SOIL
- UNDISTURBED SOIL
- COURSE POROUS FILL
- SAND
- BITUMINOUS PAVING
- CONCRETE
- TERRAZZO
- CUT STONE
- BRICK MASONRY
- CONCRETE MASONRY UNIT
- STRUCTURAL CLAY TILE UNIT MASONRY
- STEEL
- ALUMINUM
- ORNAMENTAL METAL
- EXISTING WOOD FRAMING
- WOOD BLOCKING
- FINISH WOODWORK
- PLYWOOD
- MDF / PARTICLE BOARD (SEE SPEC)
- GYPSUM WALLBOARD
- WATERPROOFING
- RIGID INSULATION
- BATT INSULATION
- CARPETING
- RESILIENT FLOORING
- PLASTIC LAMINATE
- GLAZING
- SEALANT AND BACKER ROD

SYMBOLS LEGEND

COLUMN SYMBOLS & CENTER LINES

A

1

VERTICAL ELEVATION SPOT ELEVATION

LEVEL 2 FRE 18'-6"

SECOND FLOOR EL. 18'-6"

MATCH LINE

MATCH LINE

SEE XX/X-XXX

SHEET NUMBER ON WHICH CONTIUNATION IS FOUND

PROPERTY LINE

DRAWING REVISION

INDICATES REVISION OF DOCUMENT SINCE PREVIOUS ISSUE

BREAK LINE

DATUM POINT

SAMPLE ROOM TAG

LAB 2101

ROOM NAME

ROOM NUMBER

SAMPLE ROOM FINISH TAG

W1 F1 B1

WALL FINISH

BASE FINISH

FLOOR FINISH

FOR INFORMATION,SEE MATERIALS LEGEND

CONSTRUCTION LEGEND

- NEW DOOR
- EXISTING DOOR TO REMAIN
- EXISTING CONSTRUCTION
- NEW WALL CONSTRUCTION
- NEW MASONRY CONSTRUCTION
- NEW GLASS WINDOW
- DIMENSION TAKEN TO FINISHED CONSTRUCTION
- DIMENSION TAKEN TO CENTER LINE OF FRAMING
- LINTEL. REFER TO LINTEL SCHEDULE FOR ADDITIONAL INFORMATION. CONTINUE MASONRY TO UNDERSIDE OF DECK.

DEMOLITION LEGEND

- EXISTING DOOR TO BE REMOVED
- ITEM TO BE REMOVED ENTIRELY
- EXISTING WALL TO BE REMOVED ENTIRELY
- WALL, WALL PORTION, OR ITEM TO REMAIN

PARTITION TYPE

B1

REFER TO SPECIFICATION VOLUME V FOR PARTITION SCHEDULE

BUILDING SECTION CALLOUT

1 A1.01

SECTION DESIGNATION

SHEET NUMBER

DETAIL/WALL SECTION CALLOUT

1 A1.01

SECTION DESIGNATION

SHEET NUMBER

PARTIAL PLAN AND DETAIL CALLOUT

1 A1.01

PLAN OR DETAIL DESIGNATION

SHEET NUMBER

EXTERIOR ELEVATION CALLOUT

2 A-301

ELEVATION DESIGNATION

SHEET NUMBER

INTERIOR ELEVATION CALLOUT

2 A-201

ELEVATION DESIGNATION

SHEET NUMBER

MISC. TAG

DOOR No. 000 — DOOR DESIGNATION (SEE DOOR SCHEDULE)

WINDOW No. W17 — WINDOW DESIGNATION (SEE WINDOW SCHEDULE)

TAG No. — CONSTRUCTION KEYNOTES

TAG No. — DEMOLITION KEYNOTES

ZA ARCHITECTS LLC
240 WEST CRESCENT AVENUE
ALLENDALE, NJ 07401
TEL: 201.785.8855
www.zplusarchitects.com

PROJECT TEAM:

CIVIL
SCHWANEWEDE, HALS, & VINCE
111 LITTLETON RD #200
PARSIPPANY-TROY HILLS, NJ
201-337-0053

seal:

Michael Scro
NJ LIC# 18626

BALIWALA

10 BIRCH LANE, WALDWICK, NJ
City, State Zip

Copyright © 2019 Z+ Architect, LLC

All dimensions and existing conditions shall be checked & verified by the contractor before proceeding with the work.

REV	DATE	DESCRIPTION

SHEET TITLE:

LEGEND AND ABBREVIATIONS

DESIGN DELIVERABLE: PERMIT SET

ISSUE DATE: 06/23/25

PROJECT #: 2508

DRAWN BY: AR

CHECKED BY: MS

SHEET NUMBER:

G-7

REVIT 2020

BASEMENT DOOR SCHEDULE				
		DOOR PANEL		
MARK	TYPE	WIDTH'	HEIGHT	COMMENTS
001	D-2	6' - 0"	7' - 0"	TEMPERED GLASS DOOR
002	D-3	2' - 8"	7' - 0"	
003	D-3	2' - 8"	7' - 0"	
005	K	5' - 0"	6' - 8"	
006	K	5' - 0"	6' - 8"	
007	K	5' - 0"	6' - 8"	
008	K	5' - 0"	6' - 8"	

DOOR NOTES

1. G.C. TO FIELD VERIFY ALL ROUGH OPENINGS AND SPECIFIED MODEL #'S PRIOR TO ORDERING.
2. PROVIDE 3 BALL BEARING BUTT HINGES PER SWING DOOR. FINAL FINISH TO BE SELECTED BY OWNER.
3. EMTEK LOCKSET - HERMES LEVER WITH RECTANGULAR ROSETTE. MATTE BLACK FINISH.VERIFY WITH HOME OWNER
4. ALL INTERIOR DOORS TO BE LOCATED 6" OFF HINGE SIDE WALL (U.O.N.).
5. G.C. TO PROVIDE $400 ALLOWANCE FOR INTERIOR SOLID CORE DOORE & HARDWARE, TYP.

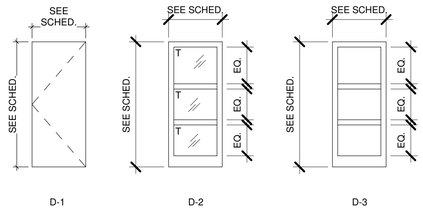

2 DOOR LEGEND
1/4" = 1'-0"

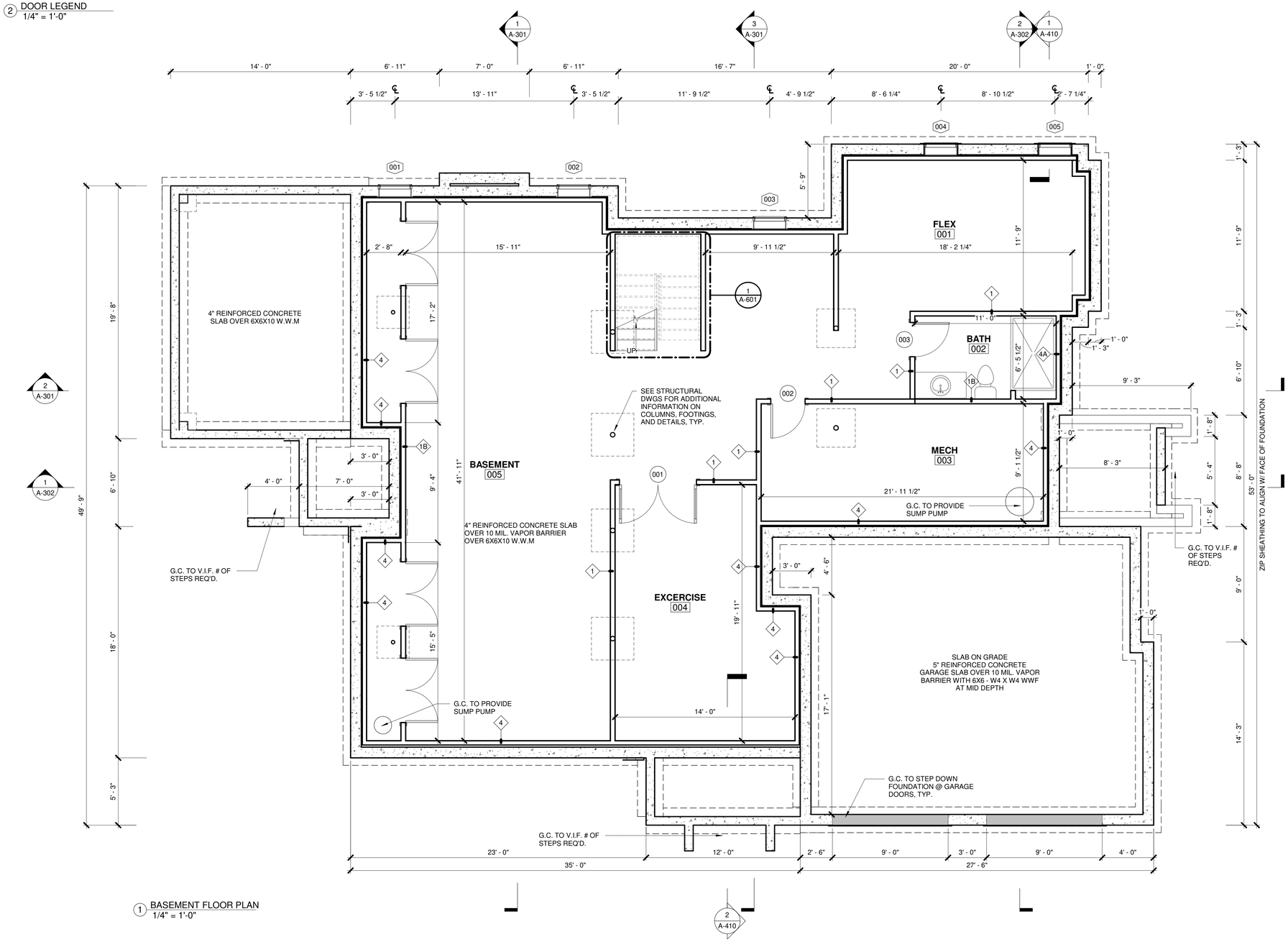

1 BASEMENT FLOOR PLAN
1/4" = 1'-0"

ZplusA ARCHITECTS LLC
240 WEST CRESCENT AVENUE
ALLENDALE, NJ 07401
TEL: 201.785.8855
www.zplusarchitects.com

PROJECT TEAM:

CIVIL
SCHWANEWEDE, HALS, & VINCE
111 LITTLETON RD #200
PARSIPPANY-TROY HILLS, NJ
201-337-0053

SEAL:

Michael Scro
NJ LIC# 18626

BALIWALA

10 BIRCH LANE, WALDWICK, NJ
City, State Zip

Copyright © 2019 - Z+ Architect, LLC

All dimensions and existing conditions shall be checked & verified by the contractor before proceeding with the work

REV	DATE	DESCRIPTION

SHEET TITLE:

FOUNDATION PLAN

DESIGN DELIVERABLE: PERMIT SET

ISSUE DATE: 06/23/25

PROJECT #: 2508

DRAWN BY: AR

CHECKED BY: MS

SHEET NUMBER:

A-100

REVIT 2020

1ST FLOOR DOOR SCHEDULE				
		DOOR PANEL		
MARK	TYPE	WIDTH'	HEIGHT	COMMENTS
101	-	6' - 0 3/4"	7' - 11 1/2"	G.C. TO PROVIDE $8,000 ALLOWANCE FOR SOLID, DOUBLE ROUND-TOP FRONT DOOR
102	D-3	2' - 8"	8' - 0"	
103	D-3	2' - 8"	8' - 0"	
104	D-3	2' - 8"	8' - 0"	
105	D-3	5' - 0"	8' - 0"	
106	D-3	3' - 0"	8' - 0"	20 MIN. FIRE RATED
107	-	9' - 0"	8' - 0"	INSULATED CLOPAY GARAGE DOOR W/ OPENER
108	-	9' - 0"	8' - 0"	INSULATED CLOPAY GARAGE DOOR W/ OPENER
109	D-3	3' - 0"	8' - 0"	G.C. TO PROVIDE $3,000 ALLOWANCE FOR SOLID SIDE DOOR
110	D-3	2' - 8"	8' - 0"	
111	D-3	2' - 8"	8' - 0"	
112	-	5' - 11 1/4"	7' - 11 1/2"	ANDERSEN 400 SERIES,DOUBLE INSWING DOOR,TEMPERED
113	-	15' - 9"	7' - 11 1/2"	ANDERSEN 400 SERIES 4 PANEL SLIDER, TEMPERED

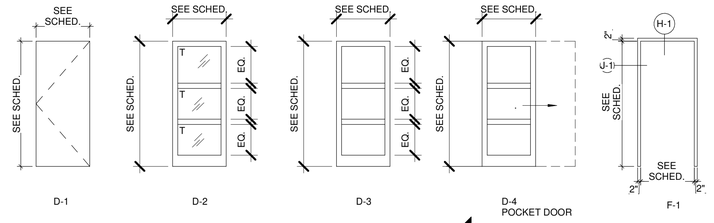

2 DOOR LEGEND
1/4" = 1'-0"

DOOR NOTES

1. G.C. TO FIELD VERIFY ALL ROUGH OPENINGS AND SPECIFIED MODEL #'S PRIOR TO ORDERING.
2. PROVIDE 3 BALL BEARING BUTT HINGES PER SWING DOOR. FINAL FINISH TO BE SELECTED BY OWNER.
3. EMTEK LOCKSET - HERMES LEVER WITH RECTANGULAR ROSETTE. MATTE BLACK FINISH.VERIFY WITH HOME OWNER
4. ALL INTERIOR DOORS TO BE LOCATED 6" OFF HINGE SIDE WALL (U.O.N.).
5. G.C. TO PROVIDE $400 ALLOWANCE FOR INTERIOR SOLID CORE DOORE & HARDWARE, TYP.

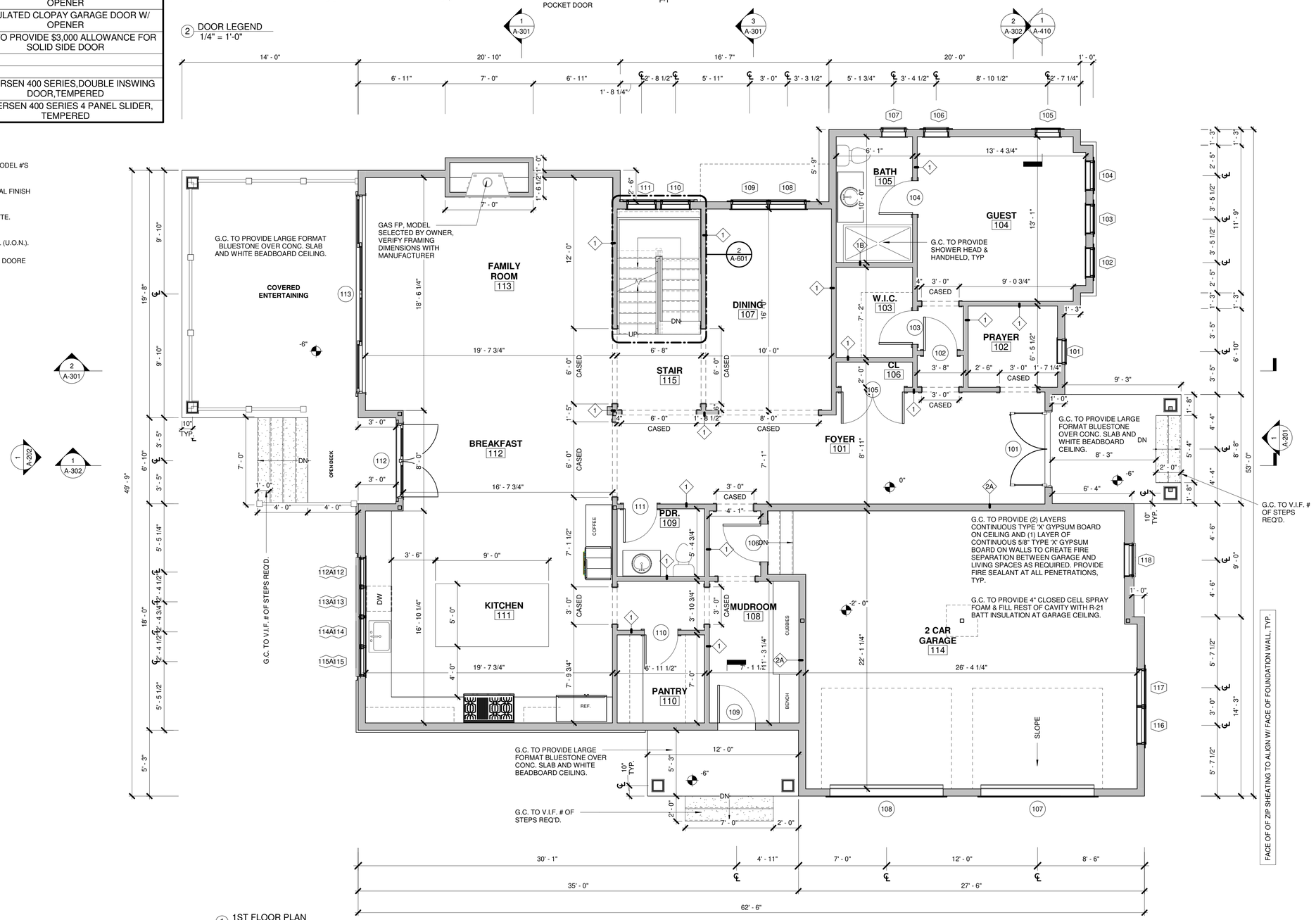

1 1ST FLOOR PLAN
1/4" = 1'-0"

ZPLUS ARCHITECTS LLC
240 WEST CRESCENT AVENUE
ALLENDALE, NJ 07401
TEL: 201.785.8855
www.zplusarchitects.com

PROJECT TEAM:

CIVIL
SCHWANEWEDE, HALS, & VINCE
111 LITTLETON RD #200
PARSIPPANY-TROY HILLS, NJ
201-337-0053

SEAL:

Michael Scro
NJ LIC# 18626

BALIWALA

10 BIRCH LANE, WALDWICK, NJ
City, State Zip

Copyright © 2019 , Z+ Architect, LLC

All dimensions and existing conditions shall be checked & verified by the contractor before proceeding with the work.

REV	DATE	DESCRIPTION

SHEET TITLE:

FIRST FLOOR PLAN

DESIGN DELIVERABLE: PERMIT SET

ISSUE DATE: 06/23/25

PROJECT #: 2508

DRAWN BY: AR

CHECKED BY: MS

SHEET NUMBER:

A-101

REVIT 2020

2ND FLOOR DOOR SCHEDULE				
		DOOR PANEL		
MARK	TYPE	WIDTH'	HEIGHT	COMMENTS
201	D-5	2' - 6"	7' - 0"	DOUBLE, FROSTED, POCKET DOOR
202	D-3	2' - 8"	7' - 0"	
203	D-3	2' - 6"	7' - 0"	
204	D-3	2' - 8"	7' - 0"	
205	D-3	4' - 0"	7' - 0"	
206	D-3	2' - 8"	7' - 0"	
207	D-3	5' - 0"	7' - 0"	
208	D-3	5' - 0"	7' - 0"	
209	D-3	2' - 8"	7' - 0"	
210	D-3	2' - 8"	7' - 0"	
211	D-3	2' - 8"	7' - 0"	
212	D-3	2' - 8"	7' - 0"	
213	D-3	2' - 8"	7' - 0"	
214	D-3	2' - 8"	7' - 0"	
215	D-3	2' - 8"	7' - 0"	
217	D4	2' - 8"	7' - 0"	
218	D-3	2' - 8"	7' - 0"	
219	D-3	2' - 8"	7' - 0"	

DOOR NOTES

1. G.C. TO FIELD VERIFY ALL ROUGH OPENINGS AND SPECIFIED MODEL #'S PRIOR TO ORDERING.
2. PROVIDE 3 BALL BEARING BUTT HINGES PER SWING DOOR. FINAL FINISH TO BE SELECTED BY OWNER.
3. EMTEK LOCKSET - HERMES LEVER WITH RECTANGULAR ROSETTE. MATTE BLACK FINISH.VERIFY WITH HOME OWNER
4. ALL INTERIOR DOORS TO BE LOCATED 6" OFF HINGE SIDE WALL (U.O.N.).
5. G.C. TO PROVIDE $400 ALLOWANCE FOR INTERIOR SOLID CORE DOORE & HARDWARE, TYP.

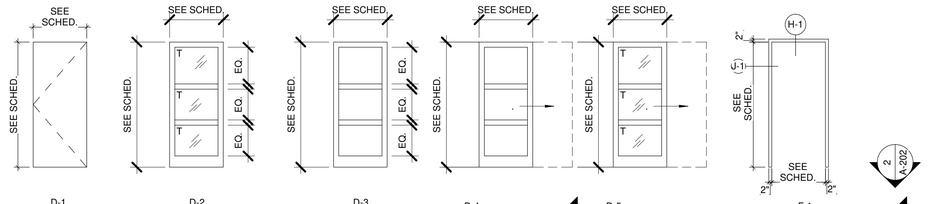

2 DOOR LEGEND
1/4" = 1'-0"

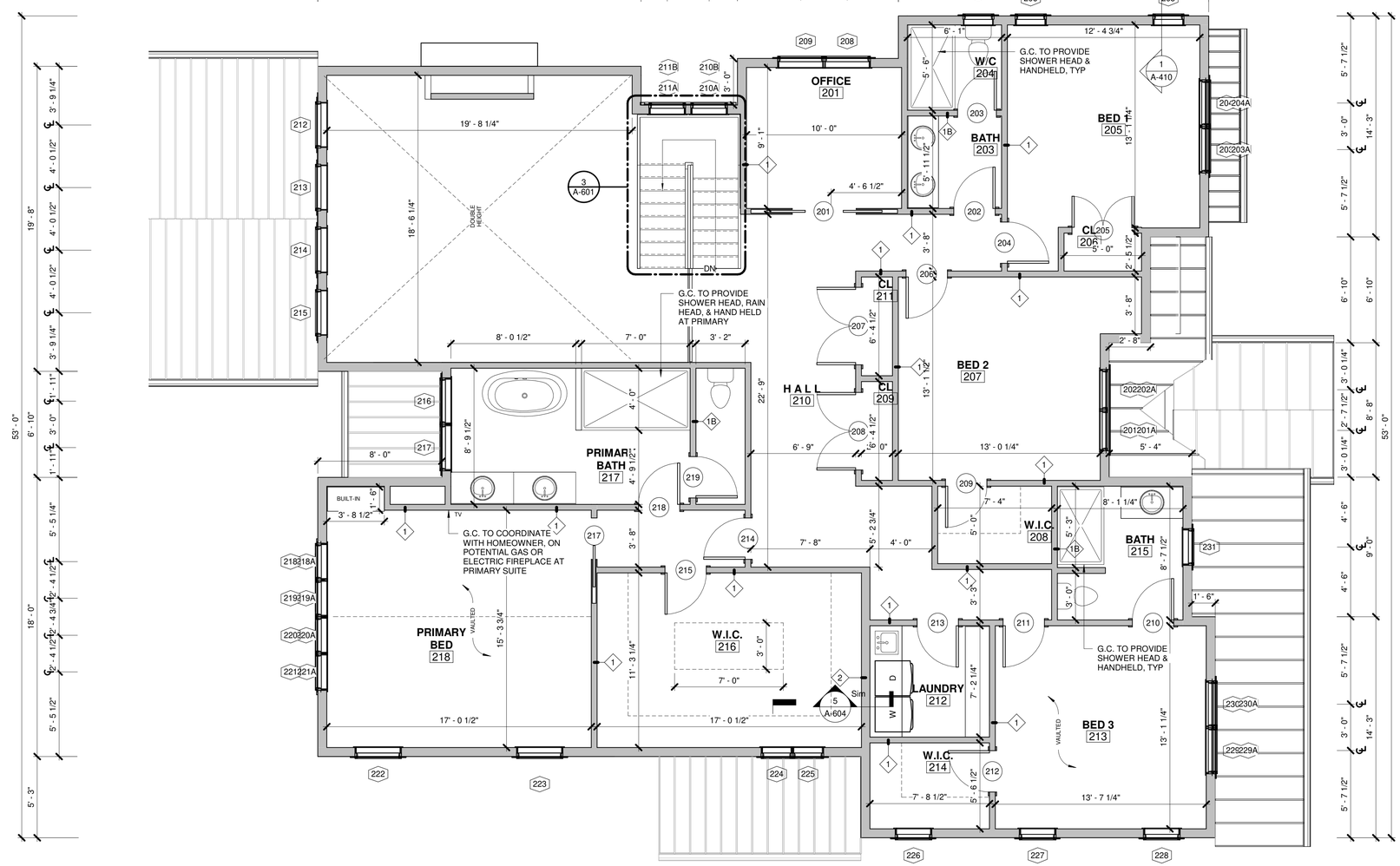

1 2ND FLOOR PLAN
1/4" = 1'-0"

ARCHITECTS LLC
240 WEST CRESCENT AVENUE
ALLENDALE, NJ 07401
TEL: 201.785.8855
www.zplusarchitects.com

PROJECT TEAM:

CIVIL
SCHWANEWEDE, HALS, & VINCE
111 LITTLETON RD #200
PARSIPPANY-TROY HILLS, NJ
201-337-0053

seal:

Michael Scro
NJ LIC# 18626

BALIWALA

10 BIRCH LANE, WALDWICK, NJ
City, State Zip

Copyright © 2019 Z+ Architect, LLC

All dimensions and existing conditions shall be checked & verified by the contractor before proceeding with the work.

REV	DATE	DESCRIPTION

SHEET TITLE:

SECOND FLOOR PLAN

DESIGN DELIVERABLE: PERMIT SET

ISSUE DATE: 06/23/25

PROJECT #: 2508

DRAWN BY: AR

CHECKED BY: MS

SHEET NUMBER:

A-102

REVIT 2020

ROOF SYMBOL LEGEND

CONTINUOUS ALUMINUM GUTTERS

DS — ALUMINUM DOWNSPOUT CONNECT LEADER TO EXISTING DRAINAGE SYSTEM, SEE CIVIL DRAWINGS FOR MORE INFO.

SLOPE OF ROOF

RAILING

RF-1 — GAF ASPHALT SHINGLE OVER 30# ROOFING FELT PAPER OVER 5/8" EXTERIOR GRADE PLYWOOD SHEATHING. SEE SPECIFICATIONS FOR ADDITIONAL INFORMATION.

RF-2 — SIMILAR TO RF-1, OVER 2 LAYERS OF 30# ROOFINGFELT PAPER.

RF-3 — DUTCH STANDING METAL SEAM ROOFING SYSTEM BY ATAS OR APPROVED EQUAL, OVER 30# ROOFING FELT (APPROVED BY ROOFING MANUFACTURE) OVER 5/8" EXTERIOR GRADE PLYWOOD SHEATHING, TYP.

ROOF GENERAL NOTES

1. ALL ROOF PENETRATIONS (I.E. MECHANICAL, CONDUIT WIRING, ETC.) SHALL BE SLEEVED, BOOTED AND FLASHED PER TYPICAL DETAILS; WHETHER INDICATED ON DOCUMENTS OR OMITTED FOR CLARITY.
2. PROVIDE ROOF CRICKETS AS INDICATED TO DIRECT WATER TO ROOF DRAINS.

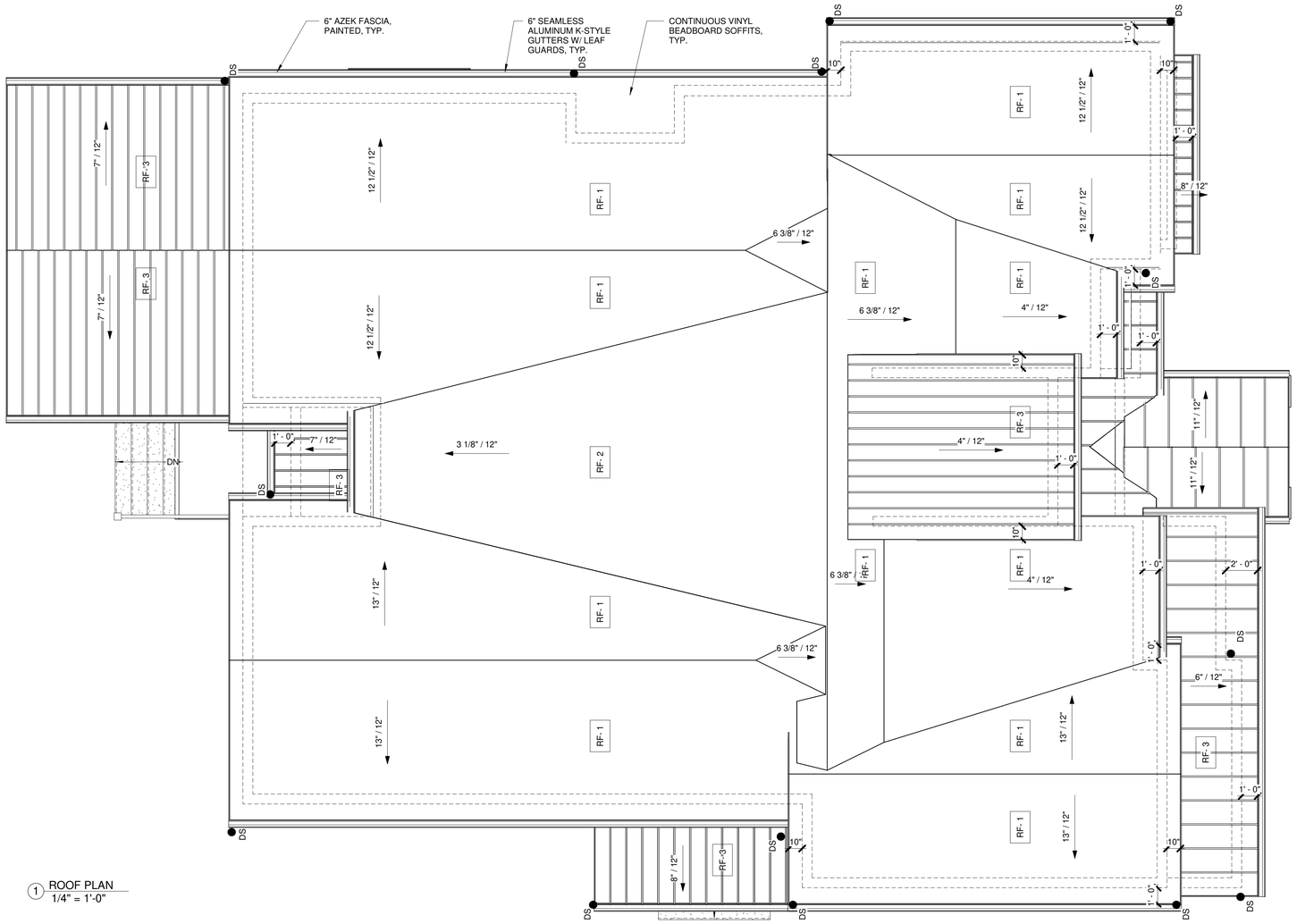

1 ROOF PLAN
1/4" = 1'-0"

ZPLUS ARCHITECTS LLC
240 WEST CRESCENT AVENUE
ALLENDALE, NJ 07401
TEL: 201.785.8855
www.zplusarchitects.com

PROJECT TEAM:

CIVIL
SCHWANEWEDE, HALS, & VINCE
111 LITTLETON RD #200
PARSIPPANY-TROY HILLS, NJ
201-337-0053

seal:

Michael Scro
NJ LIC# 18626

BALIWALA

10 BIRCH LANE, WALDWICK, NJ
City, State Zip

Copyright © 2019 , Z+ Architect, LLC

All dimensions and existing conditions shall be checked & verified by the contractor before proceeding with the work.

REV	DATE	DESCRIPTION

SHEET TITLE:
ROOF PLAN

DESIGN DELIVERABLE: PERMIT SET

ISSUE DATE: 06/23/25

PROJECT #: 2508

DRAWN BY: AR

CHECKED BY: MS

SHEET NUMBER: A-110

REVIT 2020

BASEMENT WINDOW SCHEDULE

Mark	Room: Name	Manufacture	MODEL #	SIZE Rough Width	SIZE Rough Height	Sill Height	Head Height	COMMENTS
001	STORAGE	Andersen Corporation	CX125	2' - 8"	2' - 5"	6' - 7 3/4"	9' - 0"	TEMPERED
002	BASEMENT	Andersen Corporation	CX125	2' - 8"	2' - 5"	6' - 7 3/4"	9' - 0"	TEMPERED
003	BASEMENT	Andersen Corporation	CX125	2' - 8"	2' - 5"	6' - 7 3/4"	9' - 0"	TEMPERED
004	FLEX	Andersen Corporation	CX15	2' - 8"	5' - 0 1/2"	3' - 8"	8' - 8"	TEMPERED, EGRESS
005	FLEX	Andersen Corporation	CX15	2' - 8"	5' - 0 1/2"	3' - 8"	8' - 8"	TEMPERED, EGRESS

1ST FLOOR WINDOW SCHEDULE

Mark	Room: Name	Manufacture	MODEL #	SIZE Rough Width	SIZE Rough Height	Sill Height	Head Height	COMMENTS
101	PRAYER	Andersen Corporation	C135	2' - 0 3/4"	3' - 5 1/4"	4' - 7 1/4"	8' - 0"	
102	GUEST	Andersen Corporation	CW15	2' - 5"	5' - 0 1/2"	3' - 0 1/4"	8' - 0"	EGRESS
103	GUEST	Andersen Corporation	CW15	2' - 5"	5' - 0 1/2"	3' - 0 1/4"	8' - 0"	FIXED
104	GUEST	Andersen Corporation	CW15	2' - 5"	5' - 0 1/2"	3' - 0 1/4"	8' - 0"	EGRESS
105	GUEST	Andersen Corporation	C15	2' - 0 3/4"	5' - 0 1/2"	3' - 0 1/4"	8' - 0"	
106	GUEST	Andersen Corporation	C15	2' - 0 3/4"	5' - 0 1/2"	3' - 0 1/4"	8' - 0"	
107	BATH	Andersen Corporation	C13	2' - 0 3/4"	3' - 0 1/2"	5' - 0"	8' - 0"	TEMPERED
108	DINING	Andersen Corporation	CXW155	3' - 0 1/2"	5' - 5 1/4"	2' - 7 1/4"	8' - 0"	MULLED
109	DINING	Andersen Corporation	CXW155	3' - 0 1/2"	5' - 5 1/4"	2' - 7 1/4"	8' - 0"	MULLED
110	STAIR	Andersen Corporation	CW14	2' - 5"	4' - 0 1/2"	1' - 0"	5' - 0"	TEMPERED, FIXED
111	STAIR	Andersen Corporation	CW14	2' - 5"	4' - 0 1/2"	1' - 0"	5' - 0"	TEMPERED, FIXED
112	KITCHEN	Andersen Corporation	CW14	2' - 5"	4' - 0 1/2"	3' - 0"	7' - 0"	MULLED
112A	KITCHEN	Andersen Corporation	AN251	2' - 5"	1' - 9"	7' - 4"	9' - 0 1/2"	MULLED, FIXED
113	KITCHEN	Andersen Corporation	CW14	2' - 5"	4' - 0 1/2"	3' - 0"	7' - 0"	MULLED, FIXED
113A	KITCHEN	Andersen Corporation	AN251	2' - 5"	1' - 9"	7' - 4"	9' - 0 1/2"	MULLED, FIXED
114	KITCHEN	Andersen Corporation	CW14	2' - 5"	4' - 0 1/2"	3' - 0"	7' - 0"	MULLED, FIXED
114A	KITCHEN	Andersen Corporation	AN251	2' - 5"	1' - 9"	7' - 4"	9' - 0 1/2"	MULLED, FIXED
115	KITCHEN	Andersen Corporation	CW14	2' - 5"	4' - 0 1/2"	3' - 0"	7' - 0"	MULLED
115A	KITCHEN	Andersen Corporation	AN251	2' - 5"	1' - 9"	7' - 4"	9' - 0 1/2"	MULLED, FIXED
116	2 CAR GARAGE	Andersen Corporation	CXW155	3' - 0 1/2"	5' - 5 1/4"	2' - 7 1/4"	8' - 0"	MULLED
117	2 CAR GARAGE	Andersen Corporation	CXW155	3' - 0 1/2"	5' - 5 1/4"	2' - 7 1/4"	8' - 0"	MULLED
118	2 CAR GARAGE	Andersen Corporation	CX155	2' - 8"	5' - 5 1/4"	2' - 7 1/4"	8' - 0"	

2ND FLOOR WINDOW SCHEDULE

Mark	Room: Name	Manufacture	MODEL #	SIZE Rough Width	SIZE Rough Height	Sill Height	Head Height	COMMENTS
201	BED 2	Andersen Corporation	CX14	2' - 8"	4' - 0 1/2"	3' - 0"	7' - 0"	MULLED
201A	BED 2	Andersen Corporation	AR281	2' - 8"	1' - 5 1/2"	7' - 4"	8' - 9"	MULLED, FIXED
202	BED 2	Andersen Corporation	CX14	2' - 8"	4' - 0 1/2"	3' - 0"	7' - 0"	MULLED
202A	BED 2	Andersen Corporation	AR281	2' - 8"	1' - 5 1/2"	7' - 4"	8' - 9"	MULLED FIXED
203	BED 1	Andersen Corporation	CXW155	3' - 0 1/2"	5' - 5 1/4"	1' - 7 1/4"	7' - 0"	MULLED, EGRESS
203A	BED 1	Andersen Corporation	AR31	3' - 0 1/2"	1' - 5 1/2"	7' - 4"	8' - 9"	MULLED, FIXED
204	BED 1	Andersen Corporation	CXW155	3' - 0 1/2"	5' - 5 1/4"	1' - 7 1/4"	7' - 0"	MULLED, EGRESS
204A	BED 1	Andersen Corporation	AR31	3' - 0 1/2"	1' - 5 1/2"	7' - 4"	8' - 9"	MULLED, FIXED
205	BED 1	Andersen Corporation	C14	2' - 0 3/4"	4' - 0 1/2"	3' - 0"	7' - 0"	
206	BED 1	Andersen Corporation	C14	2' - 0 3/4"	4' - 0 1/2"	3' - 0"	7' - 0"	
207	W/C	Andersen Corporation	C13	2' - 0 3/4"	3' - 0 1/2"	4' - 0"	7' - 0"	TEMPERED
208	OFFICE	Andersen Corporation	CXW145	3' - 0 1/2"	4' - 5 1/2"	2' - 7"	7' - 0"	MULLED
209	OFFICE	Andersen Corporation	CXW145	3' - 0 1/2"	4' - 5 1/2"	2' - 7"	7' - 0"	MULLED
210A	H A L L	Andersen Corporation	CW145	2' - 5"	4' - 5 1/2"	2' - 7"	7' - 0"	TEMPERED, FIXED
210B	H A L L	Andersen Corporation	CW145	2' - 5"	4' - 5 1/2"	8' - 3 1/4"	12' - 8"	TEMPERED, FIXED
211A	H A L L	Andersen Corporation	CW145	2' - 5"	4' - 5 1/2"	2' - 7"	7' - 0"	TEMPERED, FIXED
211B	H A L L	Andersen Corporation	CW145	2' - 5"	4' - 5 1/2"	8' - 3 1/4"	12' - 8"	TEMPERED, FIXED
212	FAMILY ROOM	Andersen Corporation	AXW31	3' - 0 1/2"	3' - 0 1/2"	4' - 0"	7' - 0"	FIXED
213	FAMILY ROOM	Andersen Corporation	AXW31	3' - 0 1/2"	3' - 0 1/2"	4' - 0"	7' - 0"	FIXED
214	FAMILY ROOM	Andersen Corporation	AXW31	3' - 0 1/2"	3' - 0 1/2"	4' - 0"	7' - 0"	FIXED
215	FAMILY ROOM	Andersen Corporation	AXW31	3' - 0 1/2"	3' - 0 1/2"	4' - 0"	7' - 0"	FIXED
216	PRIMARY BATH	Andersen Corporation	CXW14	3' - 0 1/2"	4' - 0 1/2"	3' - 0"	7' - 0"	MULLED, TEMPERED
217	PRIMARY BATH	Andersen Corporation	CXW14	3' - 0 1/2"	4' - 0 1/2"	3' - 0"	7' - 0"	MULLED, TEMPERED
218	PRIMARY BED	Andersen Corporation	CW15	2' - 5"	5' - 0 1/2"	2' - 0 1/4"	7' - 0"	MULLED
218A	PRIMARY BED	Andersen Corporation	AN251	2' - 5"	1' - 9"	7' - 4"	9' - 0 1/2"	MULLED, FIXED
219	PRIMARY BED	Andersen Corporation	CW15	2' - 5"	5' - 0 1/2"	2' - 0 1/4"	7' - 0"	MULLED, FIXED
219A	PRIMARY BED	Andersen Corporation	AN251	2' - 5"	1' - 9"	7' - 4"	9' - 0 1/2"	MULLED, FIXED
220	PRIMARY BED	Andersen Corporation	CW15	2' - 5"	5' - 0 1/2"	2' - 0 1/4"	7' - 0"	MULLED, FIXED
220A	PRIMARY BED	Andersen Corporation	AN251	2' - 5"	1' - 9"	7' - 4"	9' - 0 1/2"	MULLED, FIXED
221	PRIMARY BED	Andersen Corporation	CW15	2' - 5"	5' - 0 1/2"	2' - 0 1/4"	7' - 0"	MULLED
221A	PRIMARY BED	Andersen Corporation	AN251	2' - 5"	1' - 9"	7' - 4"	9' - 0 1/2"	MULLED, FIXED
222	PRIMARY BED	Andersen Corporation	CXW14	3' - 0 1/2"	4' - 0 1/2"	3' - 0"	7' - 0"	EGRESS
223	PRIMARY BED	Andersen Corporation	CXW14	3' - 0 1/2"	4' - 0 1/2"	3' - 0"	7' - 0"	EGRESS
224	W.I.C.	Andersen Corporation	C14	2' - 0 3/4"	4' - 0 1/2"	3' - 0"	7' - 0"	MULLED
225	W.I.C.	Andersen Corporation	C14	2' - 0 3/4"	4' - 0 1/2"	3' - 0"	7' - 0"	MULLED
226	W.I.C.	Andersen Corporation	CW14	2' - 5"	4' - 0 1/2"	3' - 0"	7' - 0"	
227	BED 3	Andersen Corporation	CW14	2' - 5"	4' - 0 1/2"	3' - 0"	7' - 0"	
228	BED 3	Andersen Corporation	CW14	2' - 5"	4' - 0 1/2"	3' - 0"	7' - 0"	
229	BED 3	Andersen Corporation	CXW15	3' - 0 1/2"	5' - 0 1/2"	2' - 0 1/4"	7' - 0"	MULLED, EGRESS, TEMPRERED
229A	BED 3	Andersen Corporation	AR31	3' - 0 1/2"	1' - 5 1/2"	7' - 4"	8' - 9"	MULLED, FIXED
230	BED 3	Andersen Corporation	CXW15	3' - 0 1/2"	5' - 0 1/2"	2' - 0 1/4"	7' - 0"	MULLED, EGRESS, TEMPRERED
230A	BED 3	Andersen Corporation	AR31	3' - 0 1/2"	1' - 5 1/2"	7' - 4"	8' - 9"	MULLED, FIXED
231	BATH	Andersen Corporation	CW14	2' - 5"	4' - 0 1/2"	3' - 0"	7' - 0"	TEMPERED

WINDOW NOTES

**** G.C. MUST REVIEW WINDOW SCHEDULES WITH ARCHITECT OR PROVIDE SHOP DRAWINGS PRIOR TO ORDER OR ARCHITECT WILL NOT BE RESPONSIBLE FOR ANY ERRORS AND/OR OMISSIONS.**

1. G.C. TO FIELD VERIFY ALL NEW AND EXISTING ROUGH OPENINGS WITH MODEL #'S AND DIMENSIONS PRIOR TO ORDERING. G.C. TO BRING DISCREPANCIES TO THE ARCHITECTS ATTENTION PRIOR TO ORDERING. CONTACT OWNER/ARCHITECT BEFORE ORDER.
2. WINDOWS TO BE BY ANDERSEN 400 SERIES AND SHOWN ON CONSTRUCTION DOCUMENTS OR APPROVED EQUAL, U.O.N, WITH GRILLE PATTERNS TO MATCH ELEVATIONS, SIMULATED DIVIDED LIGHT.
3. EXTERIOR AND INTERIOR COLOR / FINISH TO BE COORDINATED WITH OWNER/ARCHITECT PRIOR TO WINDOW ORDER.
4. ALL OPERABLE WINDOWS TO HAVE FULL HEIGHT TRUSCENE INSECT SCREENS.
5. ALL WINDOWS TO HAVE LOW-E4 GLASS MINIMUM. FINAL GLASS SELECTION TO BE COORDINATED WITH OWNER/ARCHITECT.
6. ALL WINDOWS HEADS TO BE MOUNTED AT 8' -0" A.F.F. AT FIRST FLOOR, AND 7' - 0" A.F.F. AT SECOND FLOOR, (U.O.N)
7. G.C. TO VERIFY ROUGH OPENING SIZE OF GROUPED WINDOWS WITH MANUFACTURE OPENING REQUIREMENTS.
8. ALL WINDOWS WITH A SILL HEIGHT BELOW 24" A.F.F. SHALL HAVE A WINDOW OPENING CONTROL DEVICE AS PER INTERNATIONAL BUILDING CODE.
9. EGRESS WINDOW UNITS MUST MEET OR EXCEED THE FOLLOWING EGRESS DIMENSIONS: 1) CLEAR OPENABLE AREA OF 5.7SQ.FT. 2) CLEAR OPENABLE WIDTH OF 20" AND CLEAR OPENABLE HEIGHT OF 24"
10. ALL GLASS SHALL BE TEMPERED GLASS IN THE FOLLOWING AREAS
    - A. GLAZING IN DOORS & ENCLOSURES FOR BATHTUBS & SHOWERS
    - B. GLAZING IN ANY PART OF A BUILDING WALL ENCLOSING BATHTUBS AND SHOWERS WHERE THE BOTTOM EXPOSED EDGE OF THE GLAZING IS LESS THAN 60" ABOVE WALKING SURFACE.
    - C. GLAZING IN WALLS ENCLOSING STAIRWAY LANDINGS OR WITHIN 60" OF THE TOP & BOTTOM OF STAIRWAYS WHERE THE BOTTOM EDGE OF THE GLASS IS LESS THAN 60" ABOVE THE WALKING SURFACE.
11. ALL GLASS SHALL BE TEMPERED GLASS WHEN THE SILL IS LOWER THAN 1'-6" A.F.F.

ZI ARCHITECTS LLC
240 WEST CRESCENT AVENUE
ALLENDALE, NJ 07401
TEL: 201.785.8855
www.zplusarchitects.com

PROJECT TEAM:

CIVIL
SCHWANEWEDE, HALS, & VINCE
111 LITTLETON RD #200
PARSIPPANY-TROY HILLS, NJ
201-337-0053

seal:

Michael Scro
NJ LIC# 18626

BALIWALA

10 BIRCH LANE, WALDWICK, NJ
City, State Zip

Copyright © 2019 , Z+ Architect, LLC

All dimensions and existing conditions shall be checked & verified by the contractor before proceeding with the work.

REV	DATE	DESCRIPTION

SHEET TITLE:

WINDOW SCHEDULE

DESIGN DELIVERABLE: PERMIT SET

ISSUE DATE: 06/23/25

PROJECT #: 2508

DRAWN BY: AR

CHECKED BY: MS

SHEET NUMBER: A-112

REVIT 2020

1 FRONT ELEVATION
1/4" = 1'-0"

2 LEFT ELEVATION
1/4" = 1'-0"

ARCHITECTS LLC
240 WEST CRESCENT AVENUE
ALLENDALE, NJ 07401
TEL: 201.785.8855
www.zplusarchitects.com

PROJECT TEAM:

CIVIL
SCHWANEWEDE, HALS, & VINCE
111 LITTLETON RD #200
PARSIPPANY-TROY HILLS, NJ
201-337-0053

seal:

Michael Scro
NJ LIC# 18626

BALIWALA

10 BIRCH LANE, WALDWICK, NJ
City, State Zip

Copyright © 2019 , Z+ Architect, LLC

All dimensions and existing conditions shall be checked & verified by the contractor before proceeding with the work.

REV	DATE	DESCRIPTION

SHEET TITLE:
EXTERIOR ELEVATIONS

DESIGN DELIVERABLE: PERMIT SET

ISSUE DATE: 06/23/25

PROJECT #: 2508

DRAWN BY: AR

CHECKED BY: MS

SHEET NUMBER:
A-201

REVIT 2020

1 REAR ELEVATION
1/4" = 1'-0"

2 RIGHT ELEVATION
1/4" = 1'-0"

ARCHITECTS LLC
240 WEST CRESCENT AVENUE
ALLENDALE, NJ 07401
TEL: 201.785.8855
www.zplusarchitects.com

PROJECT TEAM:

CIVIL
SCHWANEWEDE, HALS, & VINCE
111 LITTLETON RD #200
PARSIPPANY-TROY HILLS, NJ
201-337-0053

seal:

Michael Scro
NJ LIC# 18626

BALIWALA

10 BIRCH LANE, WALDWICK, NJ
City, State Zip

Copyright © 2019 , Z+ Architect, LLC

All dimensions and existing conditions shall be checked & verified by the contractor before proceeding with the work.

REV	DATE	DESCRIPTION

SHEET TITLE:
EXTERIOR ELEVATIONS

DESIGN DELIVERABLE: PERMIT SET

ISSUE DATE: 06/23/25

PROJECT #: 2508

DRAWN BY: AR

CHECKED BY: MS

SHEET NUMBER:
A-202

REVIT 2020

1 3D VIEW - FRONT RIGHT

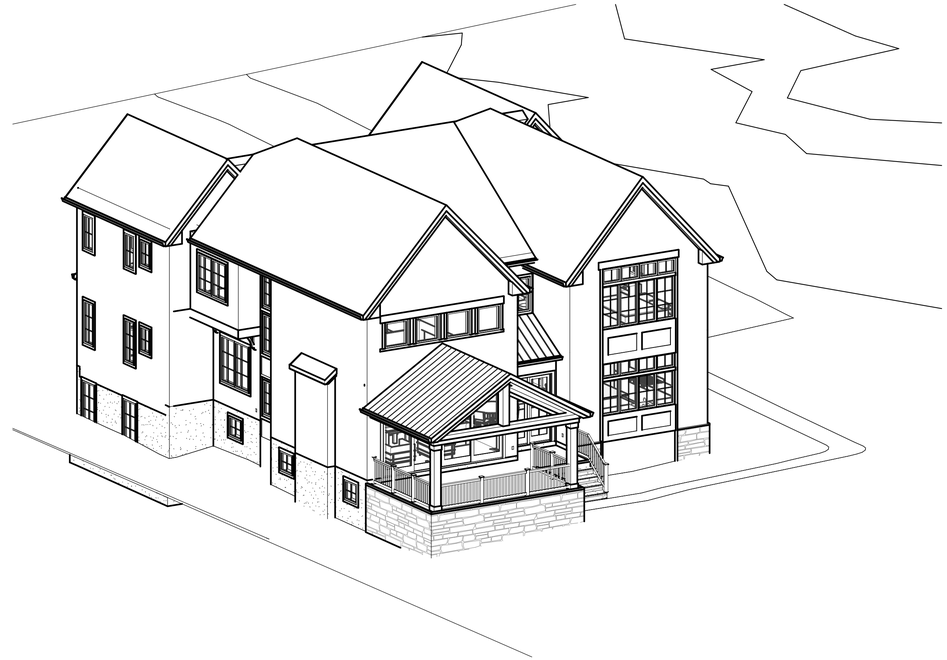

2 3D VIEW - REAR RIGHT

3 3D VIEW - REAR LEFT

4 3D VIEW - FRONT LEFT

ZplusA ARCHITECTS LLC
240 WEST CRESCENT AVENUE
ALLENDALE, NJ 07401
TEL: 201.785.8855
www.zplusarchitects.com

PROJECT TEAM:

CIVIL
SCHWANEWEDE, HALS, & VINCE
111 LITTLETON RD #200
PARSIPPANY-TROY HILLS, NJ
201-337-0053

seal:

Michael Scro
NJ LIC# 18626

BALIWALA

10 BIRCH LANE, WALDWICK, NJ
City, State Zip

Copyright © 2019 , Z+ Architect, LLC

All dimensions and existing conditions shall be checked & verified by the contractor before proceeding with the work.

REV	DATE	DESCRIPTION

SHEET TITLE:

3D AXONOMETRIC

DESIGN DELIVERABLE:
PERMIT SET

ISSUE DATE:
06/23/25

PROJECT #:
2508

DRAWN BY:
AR

CHECKED BY:
MS

SHEET NUMBER:

A-203

REVIT 2020

1 SECTION THRU PRIMARY
1/4" = 1'-0"

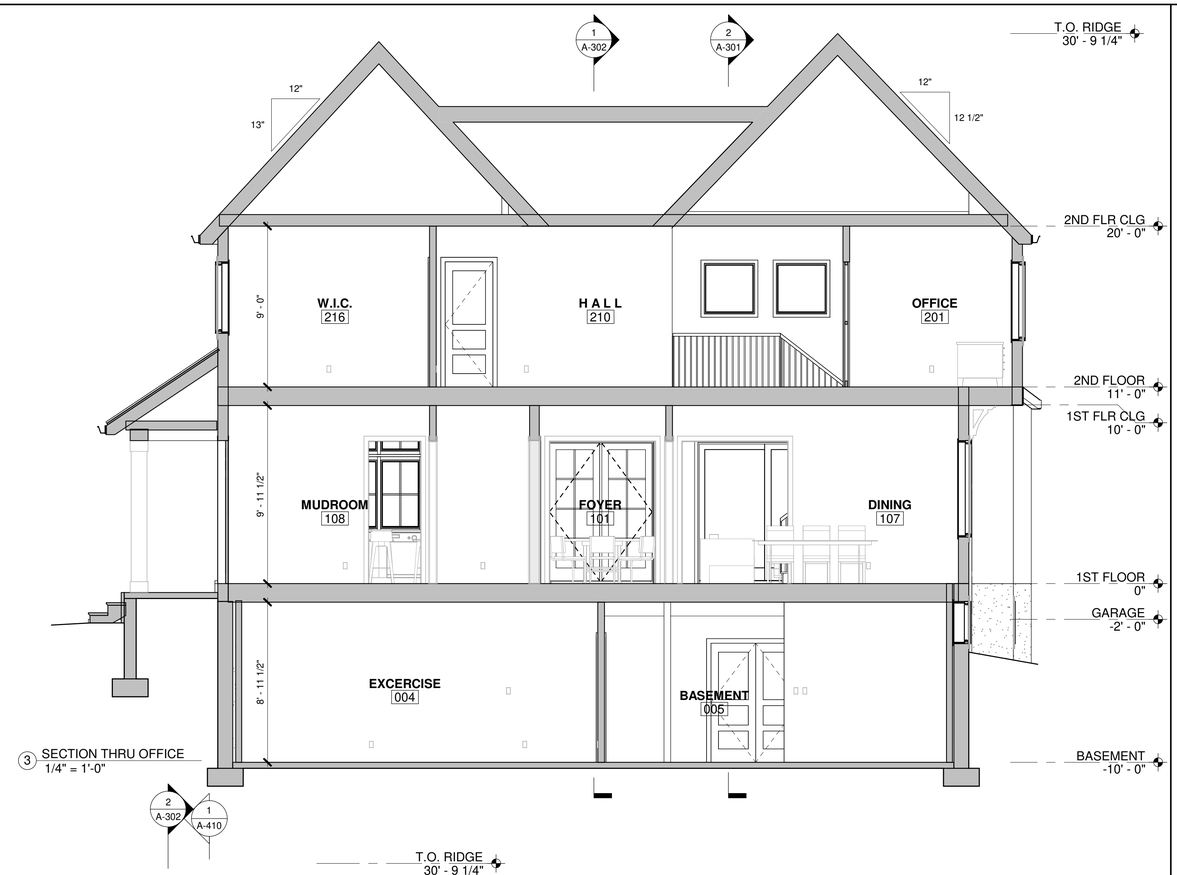

3 SECTION THRU OFFICE
1/4" = 1'-0"

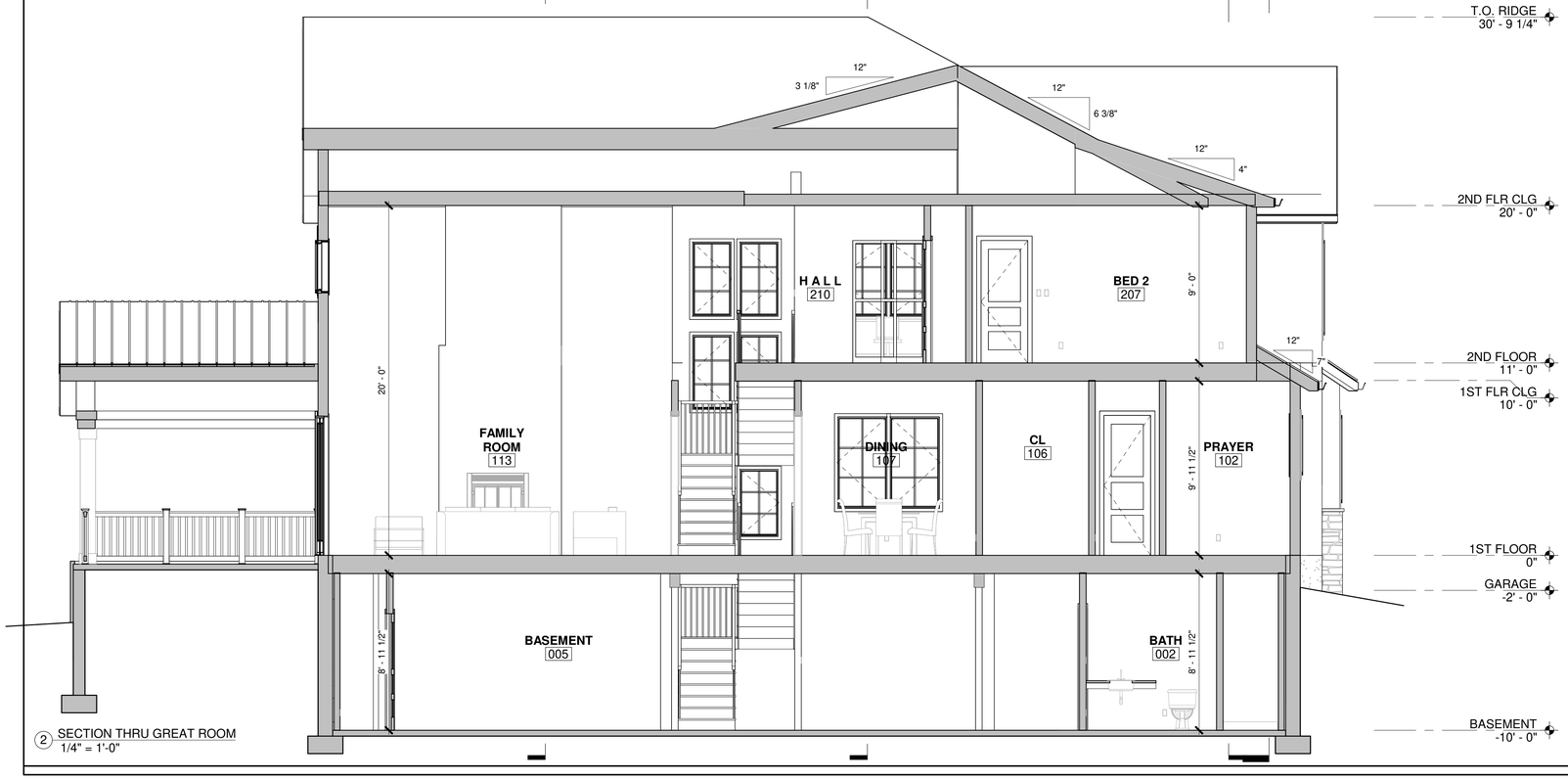

2 SECTION THRU GREAT ROOM
1/4" = 1'-0"

ARCHITECTS LLC
240 WEST CRESCENT AVENUE
ALLENDALE, NJ 07401
TEL: 201.785.8855
www.zplusarchitects.com

PROJECT TEAM:

CIVIL
SCHWANEWEDE, HALS, & VINCE
111 LITTLETON RD #200
PARSIPPANY-TROY HILLS, NJ
201-337-0053

seal:

Michael Scro
NJ LIC# 18626

BALIWALA

10 BIRCH LANE, WALDWICK, NJ
City, State Zip

Copyright © 2019 , Z+ Architect, LLC

All dimensions and existing conditions shall be checked & verified by the contractor before proceeding with the work.

REV	DATE	DESCRIPTION

SHEET TITLE:

BUILDING SECTIONS

DESIGN DELIVERABLE: PERMIT SET

ISSUE DATE: 06/23/25

PROJECT #: 2508

DRAWN BY: AR

CHECKED BY: MS

SHEET NUMBER:

A-301

REVIT 2020

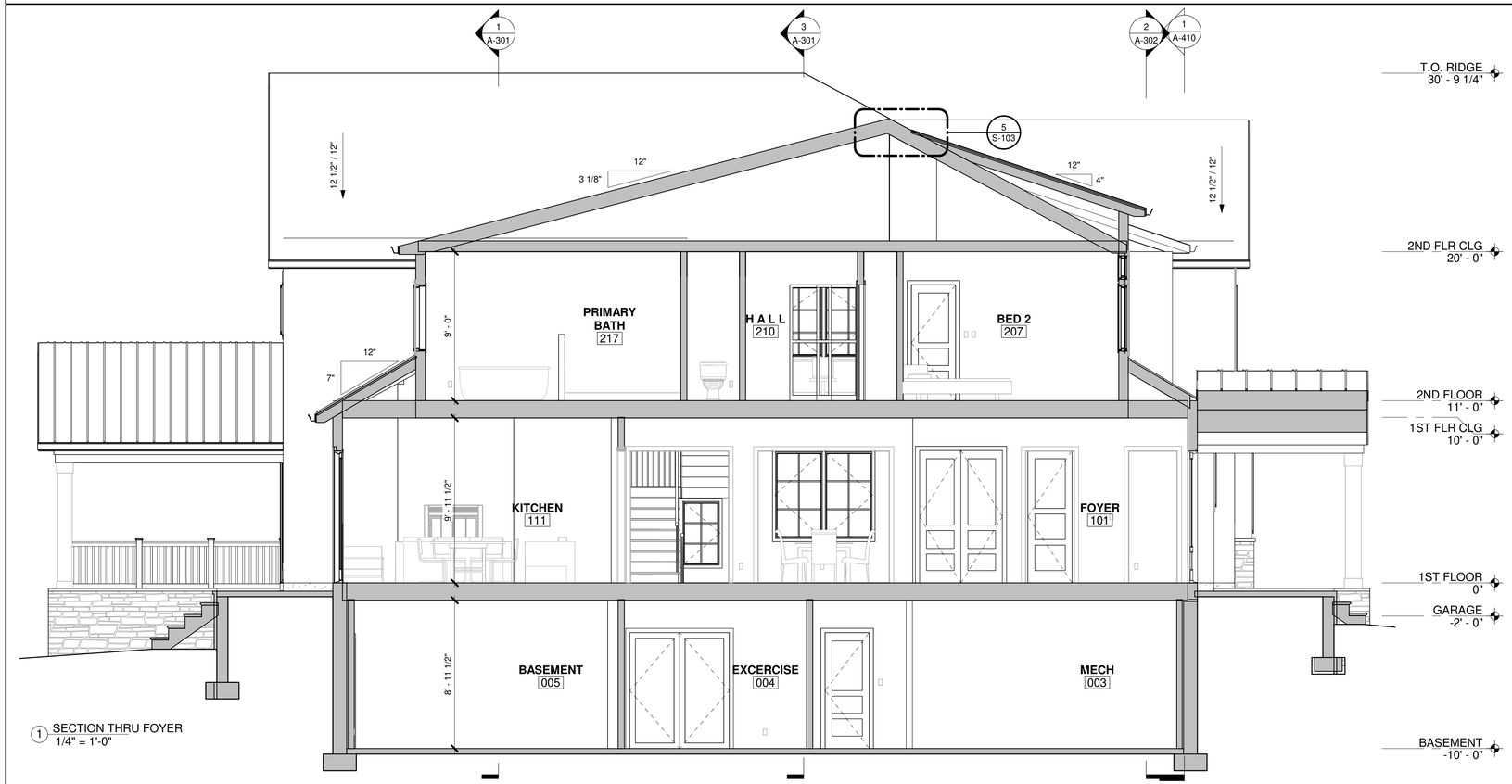

1 SECTION THRU FOYER
1/4" = 1'-0"

2 SECTION THRU BED
1/4" = 1'-0"

ARCHITECTS LLC
240 WEST CRESCENT AVENUE
ALLENDALE, NJ 07401
TEL: 201.785.8855
www.zplusarchitects.com

PROJECT TEAM:

CIVIL
SCHWANEWEDE, HALS, & VINCE
111 LITTLETON RD #200
PARSIPPANY-TROY HILLS, NJ
201-337-0053

seal:

Michael Scro
NJ LIC# 18626

BALIWALA

10 BIRCH LANE, WALDWICK, NJ
City, State Zip

Copyright © 2019 Z+ Architect, LLC

All dimensions and existing conditions shall be checked & verified by the contractor before proceeding with the work.

REV	DATE	DESCRIPTION

SHEET TITLE:

BUILDING SECTIONS

DESIGN DELIVERABLE:
PERMIT SET

ISSUE DATE:
06/23/25

PROJECT #:
2508

DRAWN BY:
AR

CHECKED BY:
MS

SHEET NUMBER:

A-302

REVIT 2020

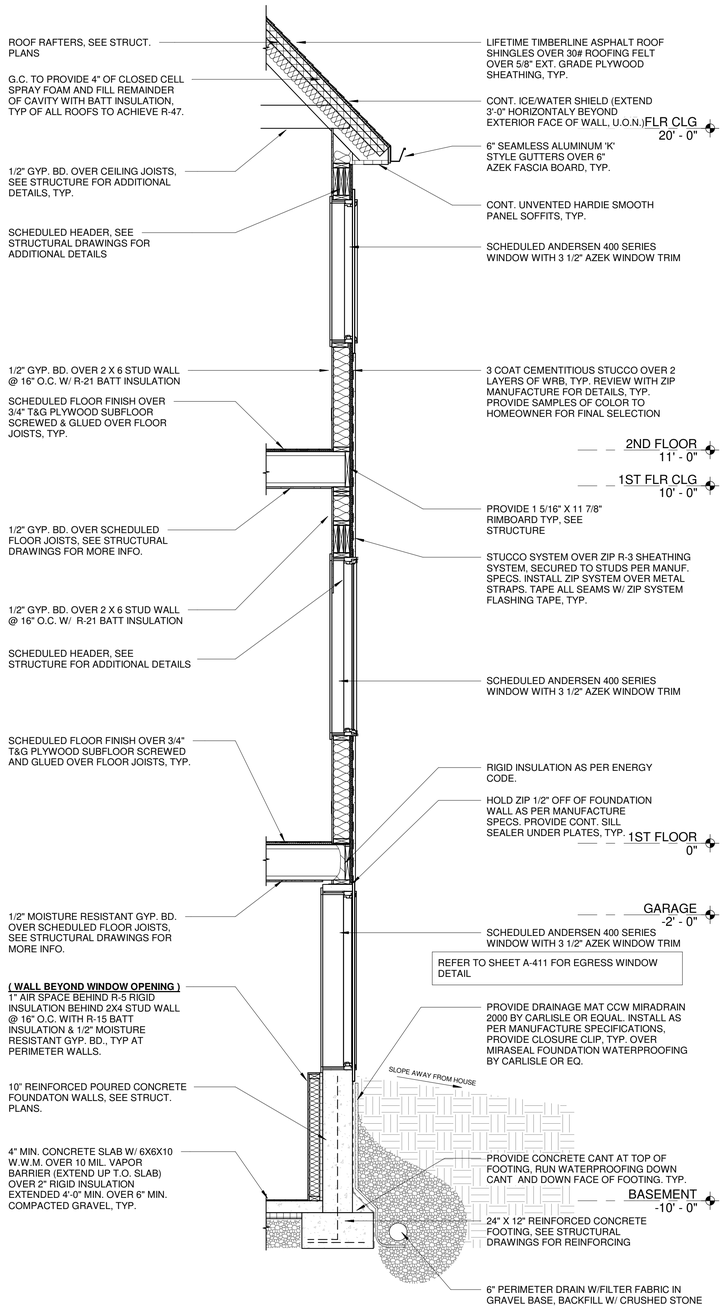

1 WALL SECTION THRU GUEST BEDROOM
1/2" = 1'-0"

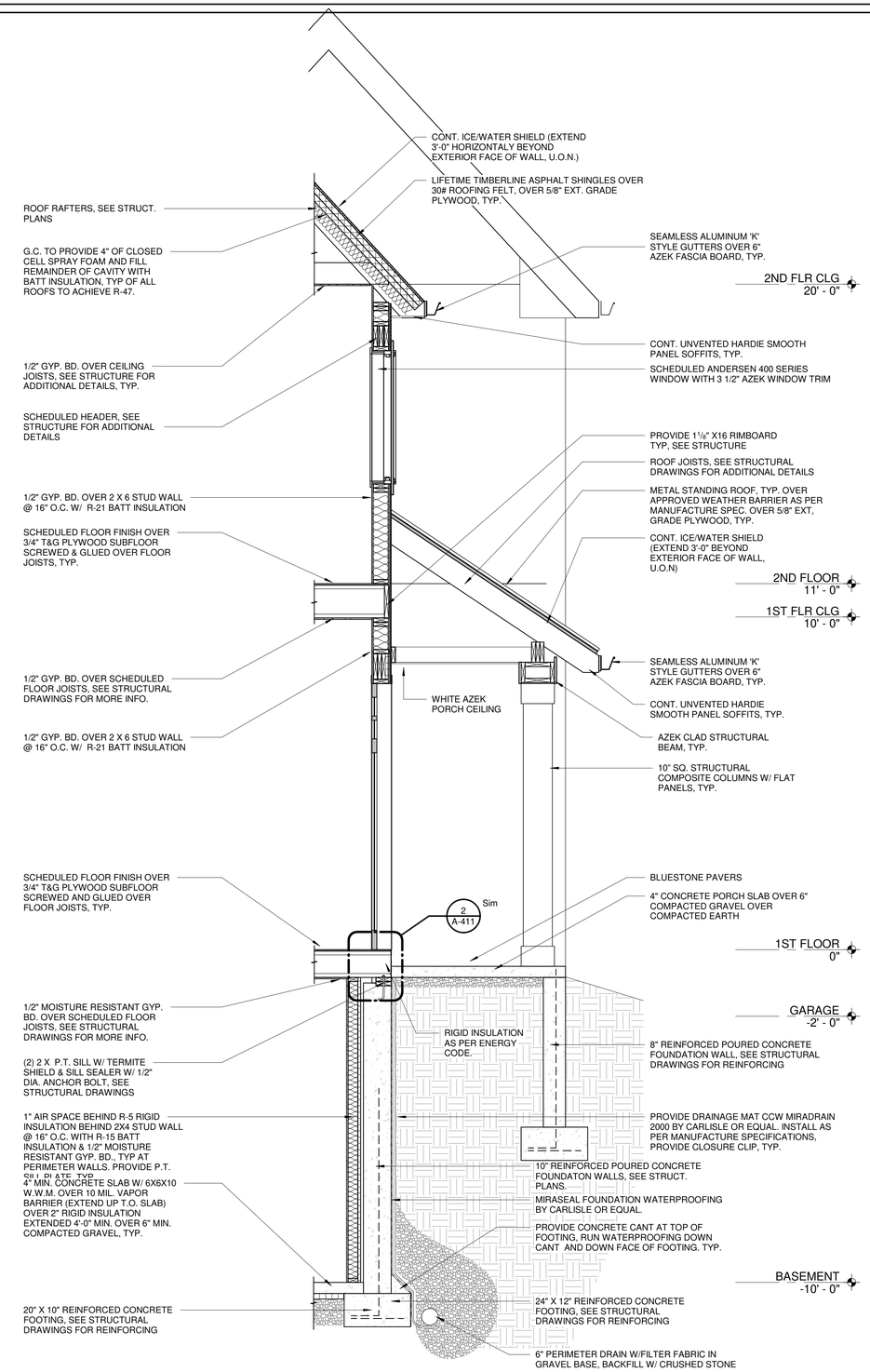

2 WALL SECTION THRU PORCH
1/2" = 1'-0"

BACKFILL AS PER NJ IBC SECTION 1804, WITH SOIL THAT IS FREE OF ORGANIC MATERIAL, CONSTRUCTION DEBRIS,COBBLES AND BOULDERS. BACKFILL SHALL BE PLACED IN LIFTS AND COMPACTED IN A MANNER THAT DOES NOT DAMAGE THE FOUNDATION OR THE WATERPROOFING MATERIAL.

ZI+ ARCHITECTS LLC
240 WEST CRESCENT AVENUE
ALLENDALE, NJ 07401
TEL: 201.785.8855
www.zpluszarchitects.com

PROJECT TEAM:

CIVIL
SCHWANEWEDE, HALS, & VINCE
111 LITTLETON RD #200
PARSIPPANY-TROY HILLS, NJ
201-337-0053

seal:

Michael Scro
NJ LIC# 18626

BALIWALA

10 BIRCH LANE, WALDWICK, NJ
City, State Zip

Copyright © 2019 Z+ Architect, LLC

All dimensions and existing conditions shall be checked & verified by the contractor before proceeding with the work.

REV	DATE	DESCRIPTION

SHEET TITLE:

WALL SECTION, WALL DETAILS

DESIGN DELIVERABLE: PERMIT SET

ISSUE DATE: 06/23/25

PROJECT #: 2508

DRAWN BY: AR

CHECKED BY: MS

SHEET NUMBER:

A-410

REVIT 2020

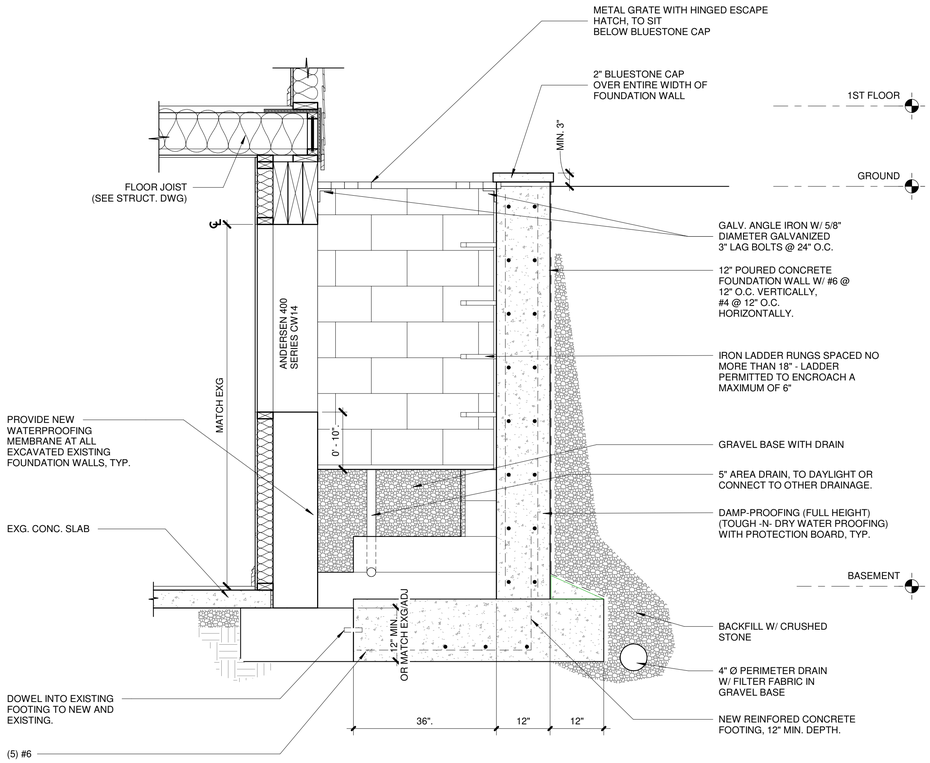

1 WINDOW WELL DETAIL - EGRESS
3/4" = 1'-0"

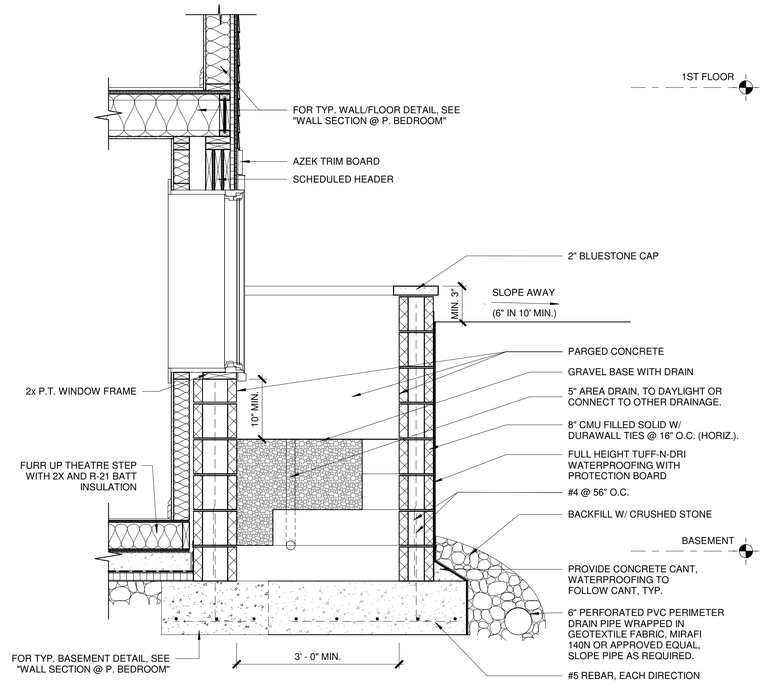

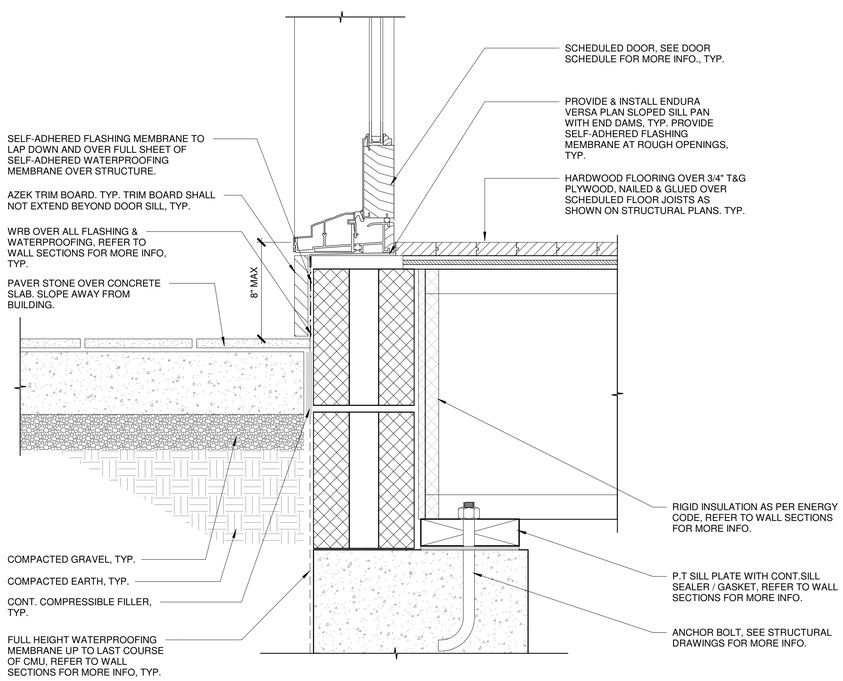

2 THRESHOLD - EXTERIOR - @ STONE ENTRY WAY
3" = 1'-0"

ZPLUS ARCHITECTS LLC
240 WEST CRESCENT AVENUE
ALLENDALE, NJ 07401
TEL: 201.785.8855
www.zplusarchitects.com

PROJECT TEAM:

CIVIL
SCHWANEWEDE, HALS, & VINCE
111 LITTLETON RD #200
PARSIPPANY-TROY HILLS, NJ
201-337-0053

seal:

Michael Scro
NJ LIC# 18626

BALIWALA

10 BIRCH LANE, WALDWICK, NJ
City, State Zip

Copyright © 2019 , Z+ Architect, LLC

All dimensions and existing conditions shall be checked & verified by the contractor before proceeding with the work.

REV	DATE	DESCRIPTION

SHEET TITLE:
DETAILS

DESIGN DELIVERABLE:
PERMIT SET

ISSUE DATE:
06/23/25

PROJECT #:
2508

DRAWN BY:
AR

CHECKED BY:
MS

SHEET NUMBER:
A-411

REVIT 2020

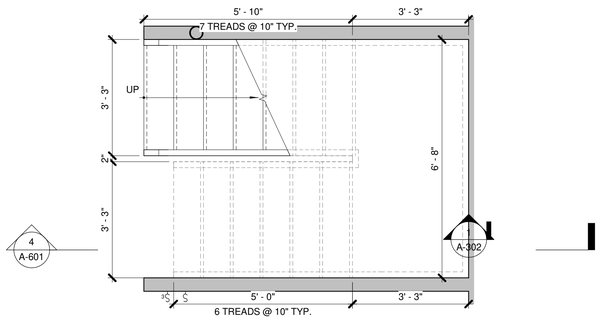

1 BASEMENT STAIR PLAN
1/2" = 1'-0"

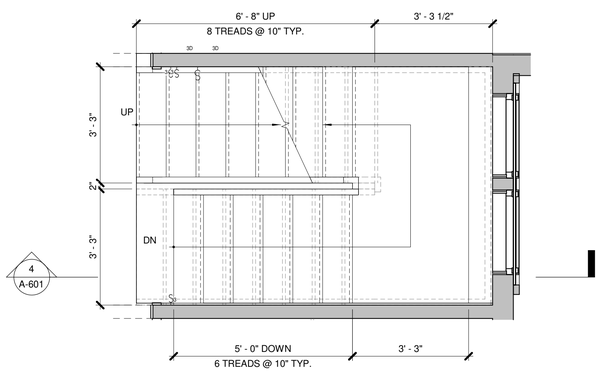

2 1ST FLOOR STAIR PLAN
1/2" = 1'-0"

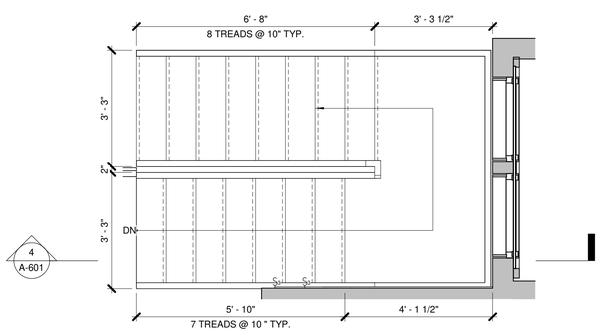

3 2ND FLOOR STAIR PLAN
1/2" = 1'-0"

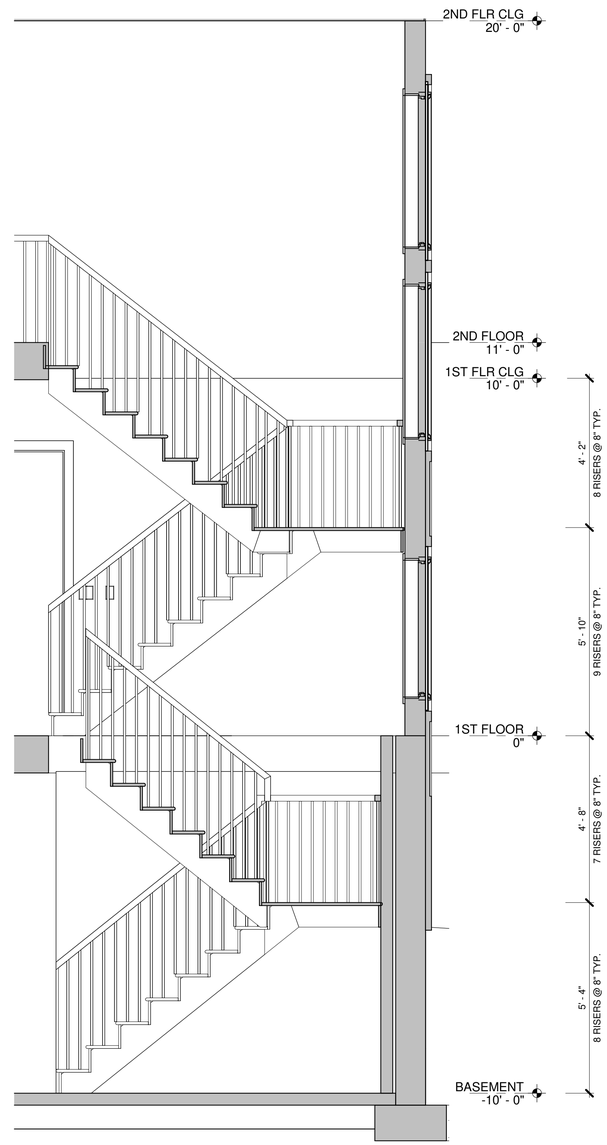

4 SECTION THRU STAIRS
1/2" = 1'-0"

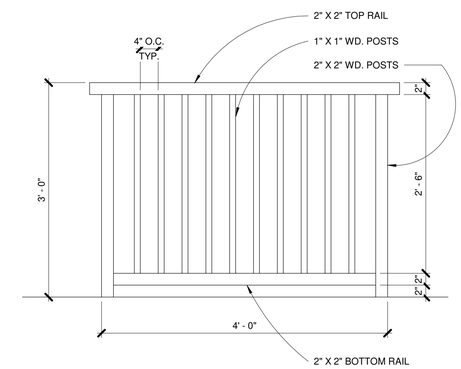

GENERAL STAIR NOTES:

1. STAIRS WITH FOUR OR MORE RISERS SHALL HAVE RAILINGS ON ALL OPEN SIDES.

2. THE GREATEST RISER HEIGHT WITHIN ANY FLIGHT OF STAIRS SHALL NOT EXCEED THE SMALLEST BY MORE THAN 3/8".

3. THERE SHALL BE A FLOOR OR LANDING AT THE TOP AND BOTTOM OF EACH STAIRWAY. THE SIZE OF THE LANDING SHALL NOT BE LESS THAN THE STAIRWAY OR DOOR SERVED. EVERY LANDING SHALL HAVE A MINIMUM DIMENSION OF 36" MEASURED IN THE DIRECTION OF TRAVEL.

4. OPEN RISERS ARE PERMITTED PROVIDED THAT THE OPENING BETWEEN TREADS DOES NOT PERMIT THE PASSAGE OF A 4" DIAMETER SPHERE.

5. THE TRIANGULAR OPENING FORMED BY RISER TREAD AND BOTTOM RAIL SHALL NOT PERMIT THE PASSAGE OF A 6" DIAMETER SPHERE.

6. STAIRWAYS SHALL NOT BE LESS THAN 36" IN CLEAR WIDTH AT ALL POINTS ABOVE PERMITTED HANDRAIL HEIGHT. HANDRAILS SHALL NOT PROJECT MORE THAN 4 1/2" ON EITHER SIDE OF STAIRWAY.

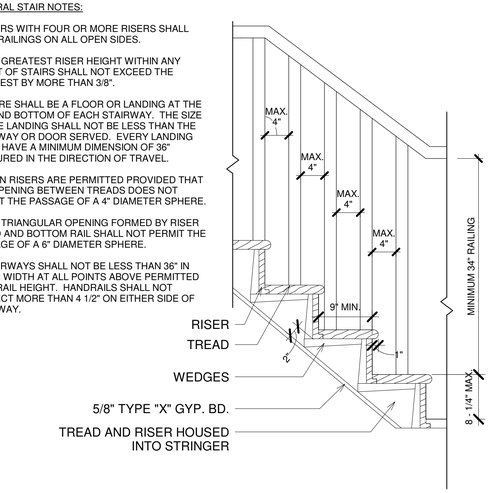

CLOSED RISERS WITH SAWTOOTH STRINGER
VERTICAL WOOD RAILING

5 STAIR & RAILING DETAILS
1" = 1'-0"

ARCHITECTS LLC
240 WEST CRESCENT AVENUE
ALLENDALE, NJ 07401
TEL: 201.785.8855
www.zplusarchitects.com

PROJECT TEAM:

CIVIL
SCHWANEWEDE, HALS, & VINCE
111 LITTLETON RD #200
PARSIPPANY-TROY HILLS, NJ
201-337-0053

SEAL:

Michael Scro
NJ LIC# 18626

BALIWALA

10 BIRCH LANE, WALDWICK, NJ
City, State Zip

Copyright © 2019 , Z+ Architect, LLC

All dimensions and existing conditions shall be checked & verified by the contractor before proceeding with the work.

REV	DATE	DESCRIPTION

SHEET TITLE:
STAIR PLANS & SECTIONS

DESIGN DELIVERABLE: PERMIT SET

ISSUE DATE: 06/23/25

PROJECT #: 2508

DRAWN BY: AR

CHECKED BY: MS

SHEET NUMBER:
A-601

REVIT 2020

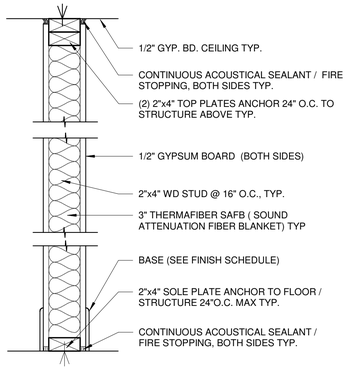

1 PARTITION TYPE 1

SCALE: 1 1/2" = 1'-0"

STANDARD NON-LOAD BEARING STUD PARTITION

1A PARTITION TYPE 1A (UL DES. U305)

SIMILAR TO TYPE 1 - W/ 1/2" CEMENTIOUS BOARD BOTH SIDES. PROVIDE FULL HEIGHT WATERPROOFING MEMBRANE IN SHOWER AREA, NO EXCEPTIONS. PROVIDE FULL HEIGHT WATERPROOFING MEMBRANE IN SHOWER AREA, NO EXCEPTIONS

1B PARTITION TYPE 1B

SIMILAR TO TYPE 1 - W/ 1/2" CEMENTIOUS BOARD 1 SIDE, 1/2" GYP OTHER SIDE. PROVIDE FULL HEIGHT WATERPROOFING MEMBRANE IN SHOWER AREA, NO EXCEPTIONS

1 PARTITION TYPE 1
1 1/2" = 1'-0"

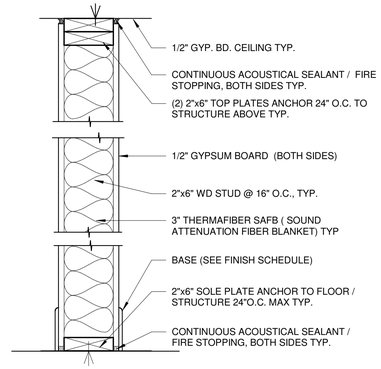

2 PARTITION TYPE 2

SCALE: 1 1/2" = 1'-0"

STANDARD NON-LOAD BEARING. PROVIDE FULL HEIGHT WATERPROOFING MEMBRANE IN SHOWER AREA, NO EXCEPTIONS.

2A PARTITION TYPE 2A

STANDARD NON-LOAD BEARING STUD PARTITION W/ 5/8" TYP 'X' GYP BD AT GARAGE

2 PARTITION TYPE 2
1 1/2" = 1'-0"

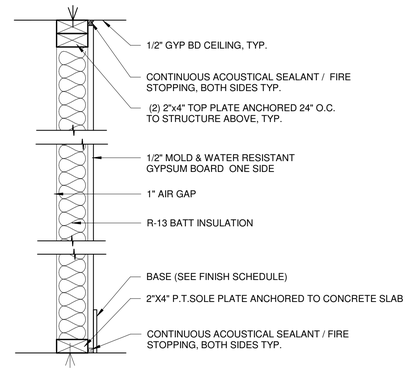

4 PARTITION TYPE 4

SCALE: 1 1/2" = 1'-0"

STANDARD NON-LOAD BEARING, NON-RATED STUD PARTITION, W/ 1/2" GYP ON ONE SIDE.

4A PARTITION TYPE 4A

STANDARD NON-LOAD BEARING, NON-RATED LOW HEIGHT STUD PARTITION, W/ 1/2" CEMENTIOUS BOARD ONE SIDE.

3 PARTITION TYPE 4
1 1/2" = 1'-0"

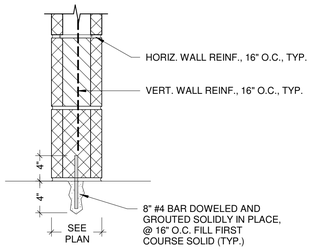

4 TYP WALL ANCHORING DETAIL
1 1/2" = 1'-0"

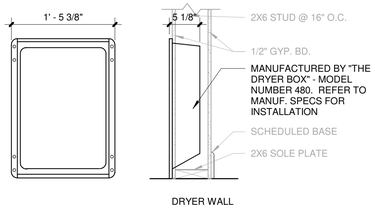

5 DRYER BOX DETAIL
1" = 1'-0"

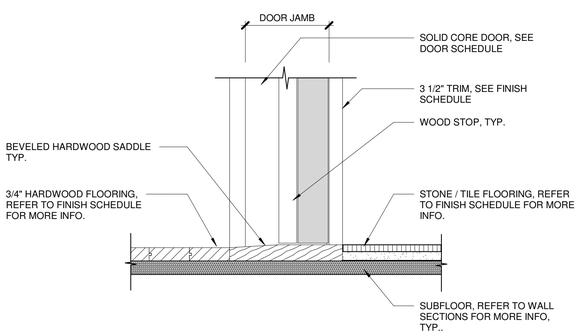

6 THRESHOLD 03 - WOOD TO STONE/TILE
3" = 1'-0"

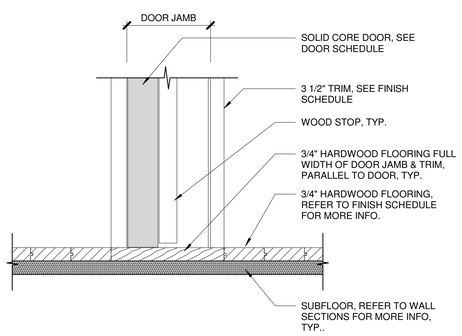

7 THRESHOLD 02 - WOOD TO WOOD
3" = 1'-0"

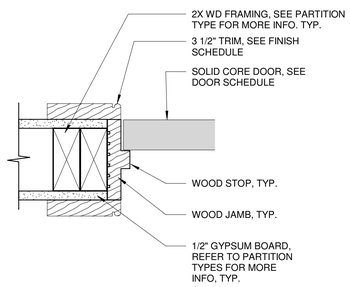

J-7 / H-7

8 J-7 / H-7- TYP WOOD DOOR JAMB / HEAD
3" = 1'-0"

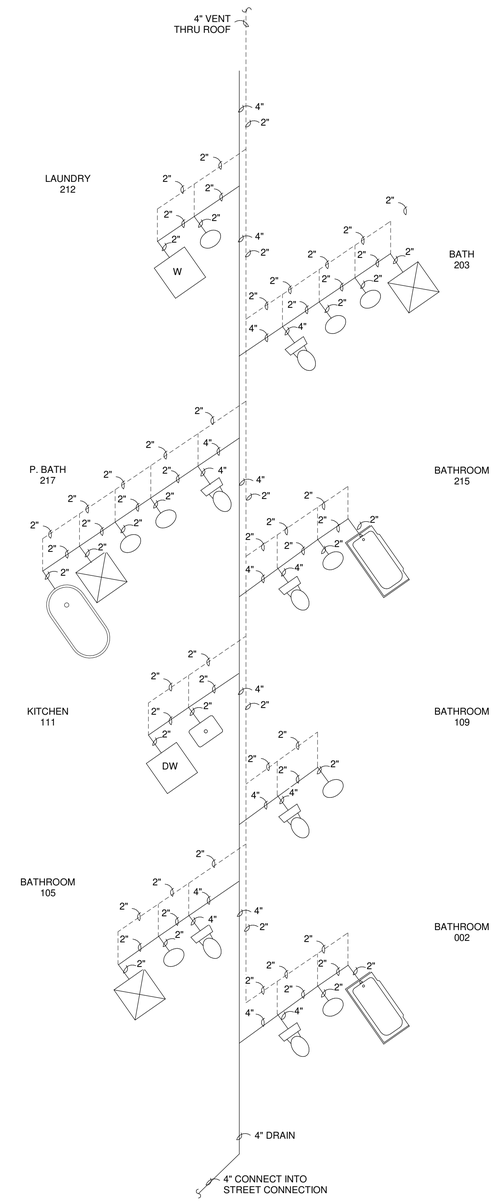

9 PLUMBING RISER DIAGRAM
3/16" = 1'-0"

ZA ARCHITECTS LLC
240 WEST CRESCENT AVENUE
ALLENDALE, NJ 07401
TEL: 201.785.8855
www.zplusarchitects.com

PROJECT TEAM:

CIVIL
SCHWANEWEDE, HALS, & VINCE
111 LITTLETON RD #200
PARSIPPANY-TROY HILLS, NJ
201-337-0053

seal:

Michael Scro
NJ LIC# 18626

BALIWALA

10 BIRCH LANE, WALDWICK, NJ
City, State Zip

Copyright © 2019 , Z+ Architect, LLC

All dimensions and existing conditions shall be checked & verified by the contractor before proceeding with the work.

REV	DATE	DESCRIPTION

SHEET TITLE:

PARTITION TYPES & RISER DIAGRAMS

DESIGN DELIVERABLE: PERMIT SET

ISSUE DATE: 06/23/25

PROJECT #: 2508

DRAWN BY: AR

CHECKED BY: MS

SHEET NUMBER:

A-604

REVIT 2020

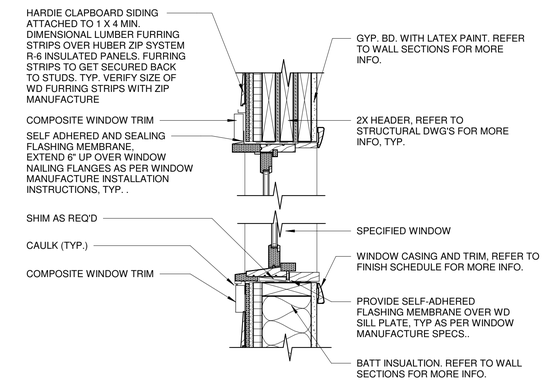

1 WINDOW HEAD & SILL DETAIL - NO STONE WITH ZIP SYSTEM
1 1/2" = 1'-0"

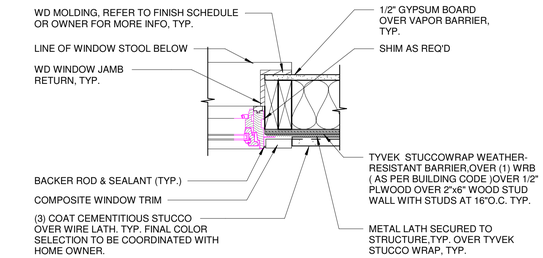

5 WINDOW JAMB STUCCO DETAIL - NO GYPSUM RETURN
1 1/2" = 1'-0"

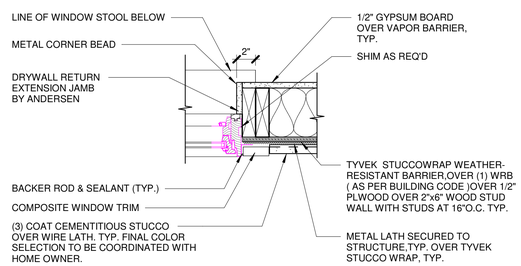

6 WINDOW JAMB STUCCO DETAIL
1 1/2" = 1'-0"

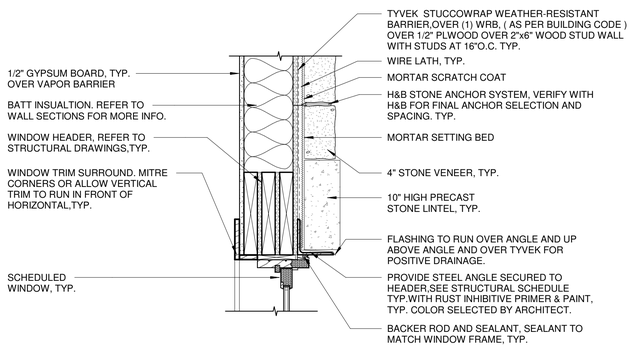

2 WINDOW HEAD - STONE DETAIL
1 1/2" = 1'-0"

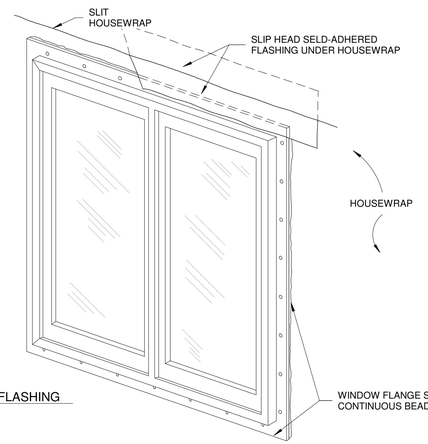

7 WINDOW HEAD FLASHING
3/4" = 1'-0"

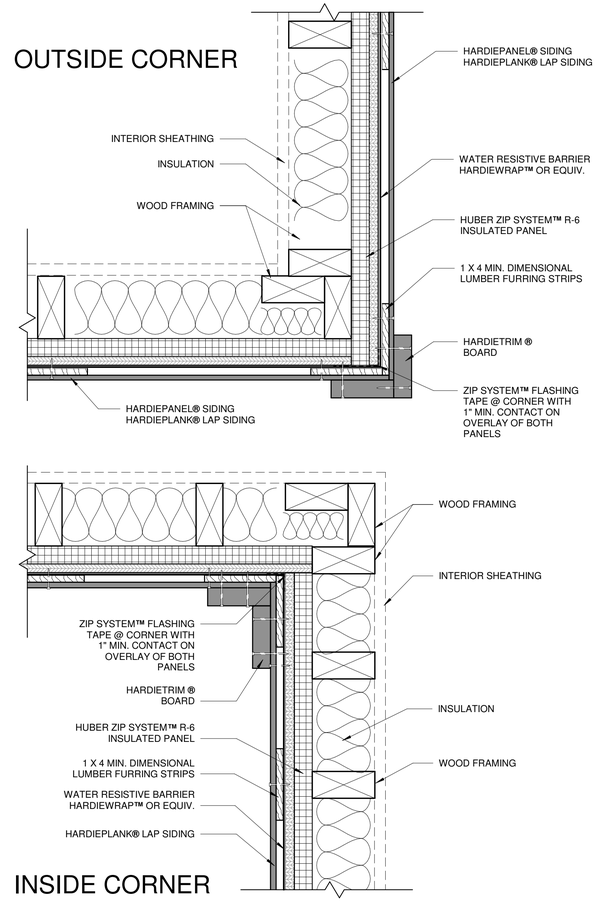

9 SIDING - HARDIE SIDING - CORNERS WITH ZIP SYSTEM
3" = 1'-0"

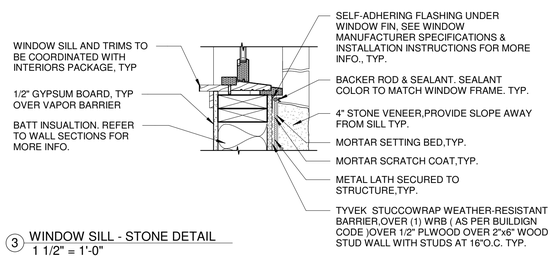

3 WINDOW SILL - STONE DETAIL
1 1/2" = 1'-0"

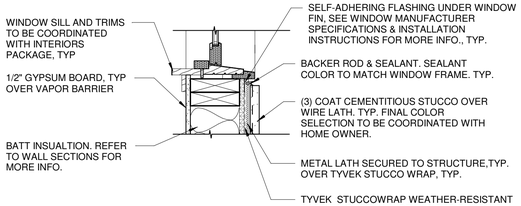

4 WINDOW SILL - STUCCO DETAIL
1 1/2" = 1'-0"

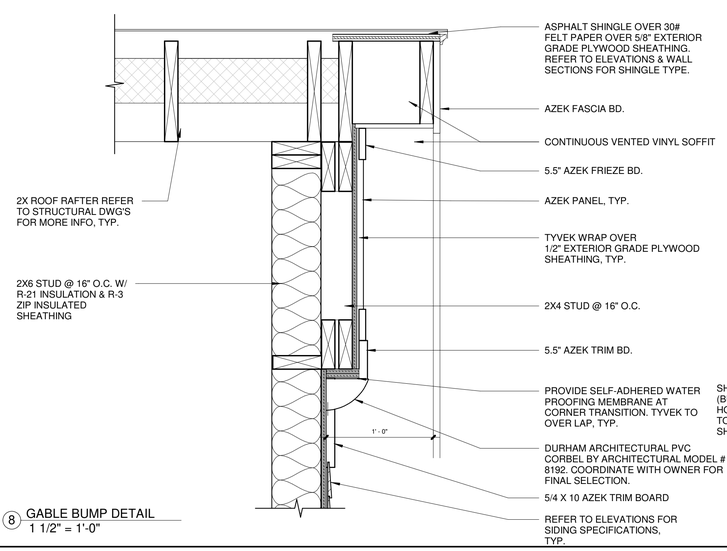

8 GABLE BUMP DETAIL
1 1/2" = 1'-0"

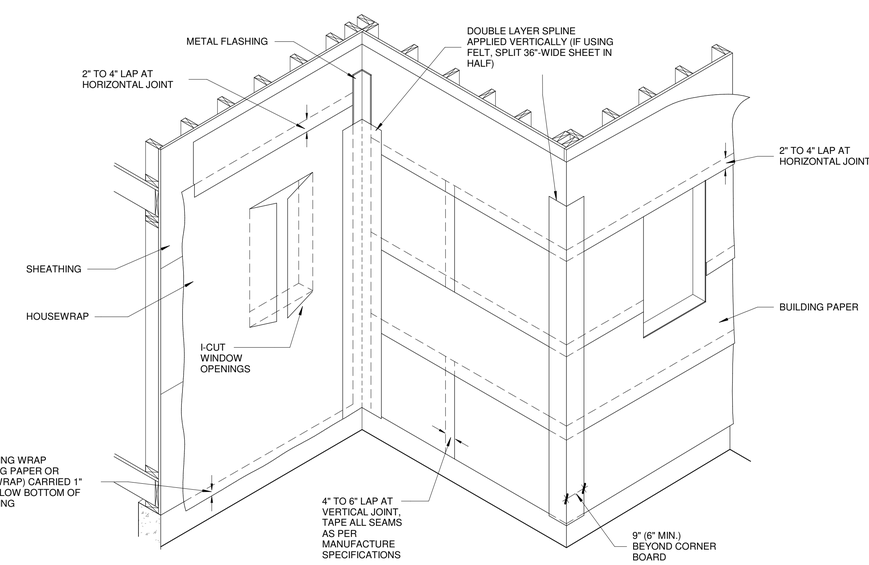

AFA SHEATHING WRAP DETAILS
1/2" = 1'-0"

ZL ARCHITECTS
240 WEST CRESCENT AVENUE
ALLENDALE, NJ 07401
TEL: 201.785.8855
www.zplusarchitects.com

PROJECT TEAM:

CIVIL
SCHWANEWEDE, HALS, & VINCE
111 LITTLETON RD #200
PARSIPPANY-TROY HILLS, NJ
201-337-0053

SEAL:

Michael Scro
NJ LIC# 18626

BALIWALA

10 BIRCH LANE, WALDWICK, NJ
City, State Zip

Copyright © 2019 Z+ Architect, LLC

All dimensions and existing conditions shall be checked & verified by the contractor before proceeding with the work

REV	DATE	DESCRIPTION

SHEET TITLE:

SIDING & WINDOW DETAILS

DESIGN DELIVERABLE: PERMIT SET

ISSUE DATE: 06/23/25

PROJECT #: 2508

DRAWN BY: AR

CHECKED BY: MS

SHEET NUMBER:

A-801

REVIT 2020

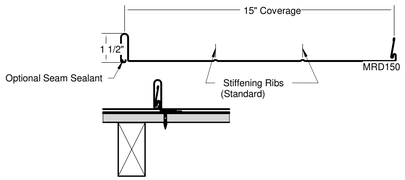

TYPICAL POSITIVE PANEL INTERLOCK

Note: START/END VENTED Z CLOSURE RUNS WITH AT LEAST 2'-0" OF NON-VENT Z CLOSURES.

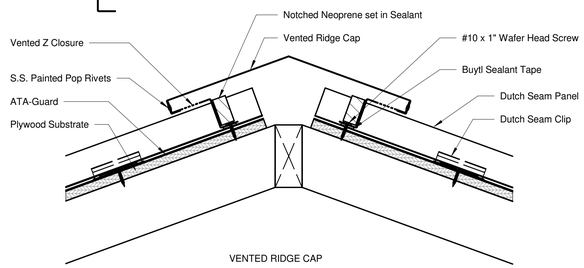

VENTED RIDGE CAP

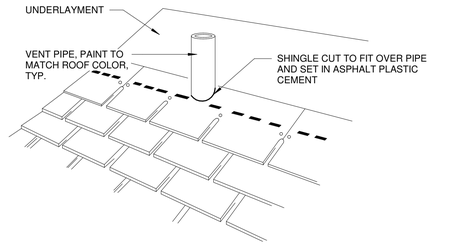

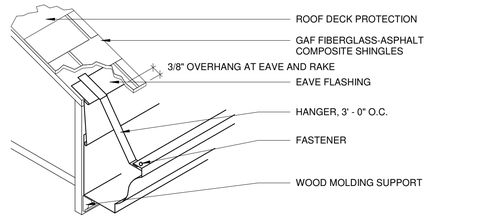

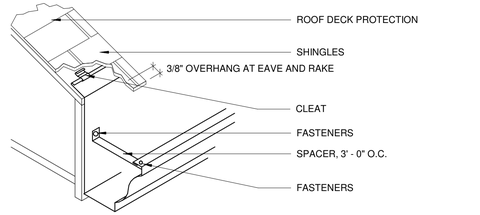

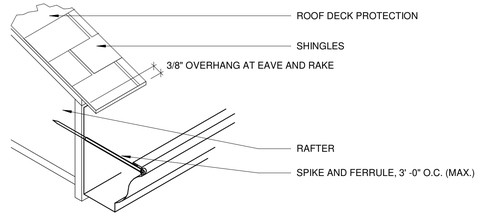

6 HANGING GUTTER INSTALLATIONS
1 1/2" = 1'-0"

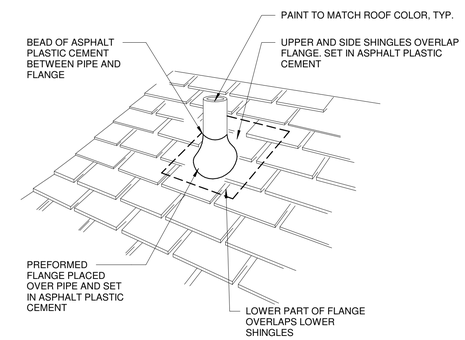

4 VENT PIPE FLASHING
1" = 1'-0"

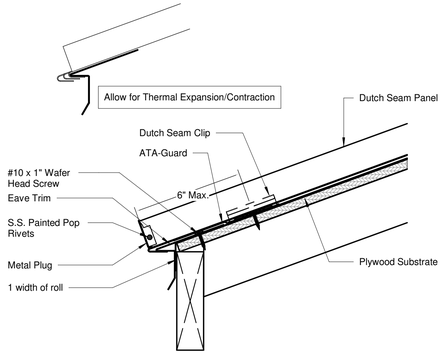

EAVE TRIM

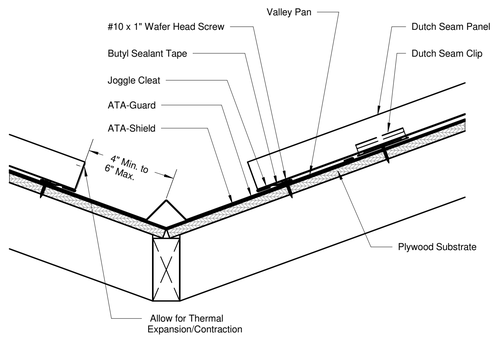

VALLEY PAN

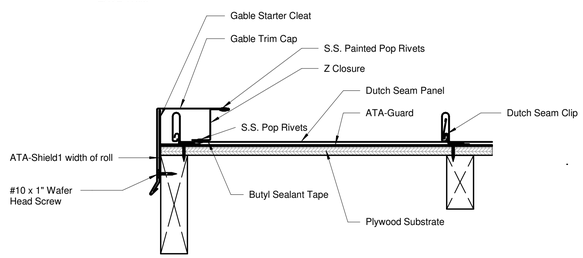

GABLE TRIM CAP WITH GABLE STARTER CLEAT

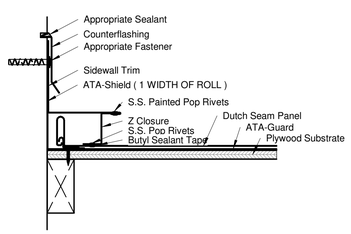

SIDEWALL TRIM

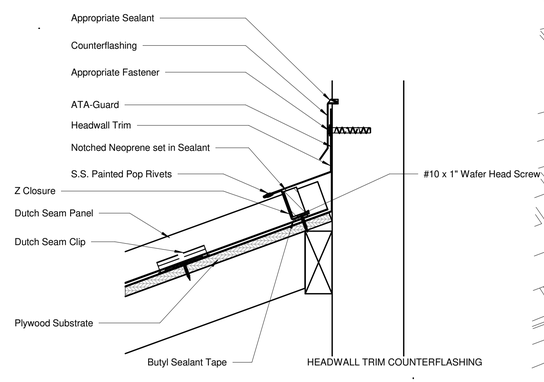

1 ATAS - DUTCH SEAM MTL ROOFING DETAILS
3" = 1'-0"

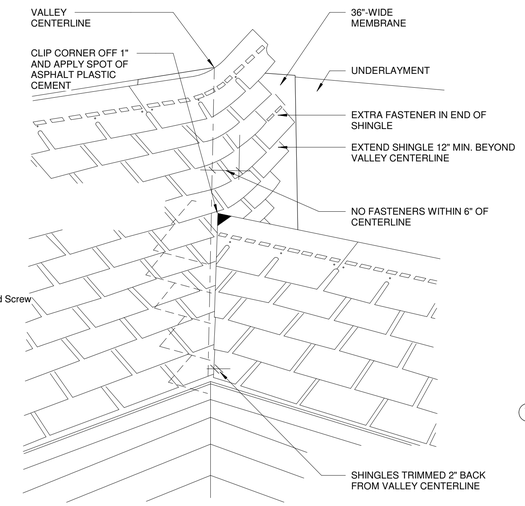

5 ASPHALT CLOSED-CUT VALLEY
3/4" = 1'-0"

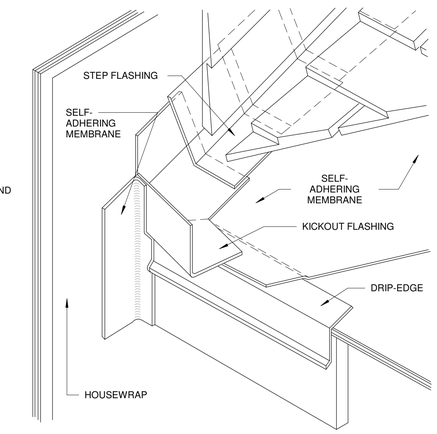

7 KICK-OUT FLASHING
1 1/2" = 1'-0"

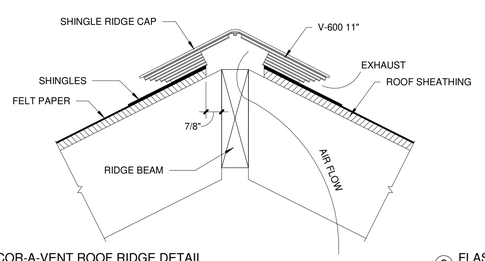

2 COR-A-VENT ROOF RIDGE DETAIL
3" = 1'-0"

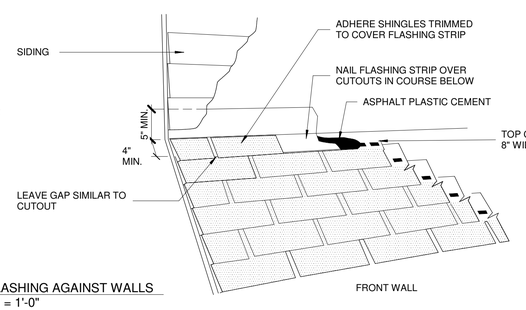

3 FLASHING AGAINST WALLS
1" = 1'-0"

FRONT WALL

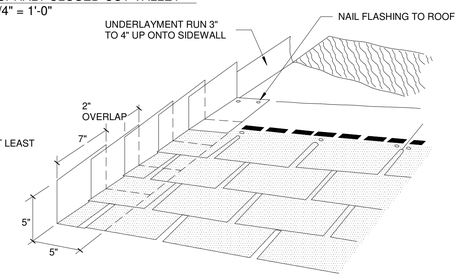

SIDE WALLS

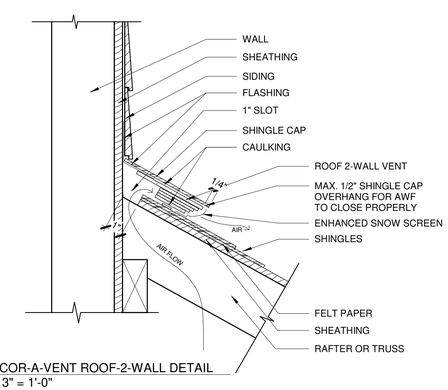

10 COR-A-VENT ROOF-2-WALL DETAIL
3" = 1'-0"

ARCHITECTS LLC
240 WEST CRESCENT AVENUE
ALLENDALE, NJ 07401
TEL: 201.785.8855
www.zplusarchitects.com

PROJECT TEAM:

CIVIL
SCHWANEWEDE, HALS, & VINCE
111 LITTLETON RD #200
PARSIPPANY-TROY HILLS, NJ
201-337-0053

seal:

Michael Scro
NJ LIC# 18626

BALIWALA

10 BIRCH LANE, WALDWICK, NJ
City, State Zip

Copyright © 2019 , Z+ Architect, LLC

All dimensions and existing conditions shall be checked & verified by the contractor before proceeding with the work.

REV	DATE	DESCRIPTION

SHEET TITLE:

ROOF DETAILS

DESIGN DELIVERABLE: PERMIT SET

ISSUE DATE: 06/23/25

PROJECT #: 2508

DRAWN BY: AR

CHECKED BY: MS

SHEET NUMBER:

A-802

REVIT 2020

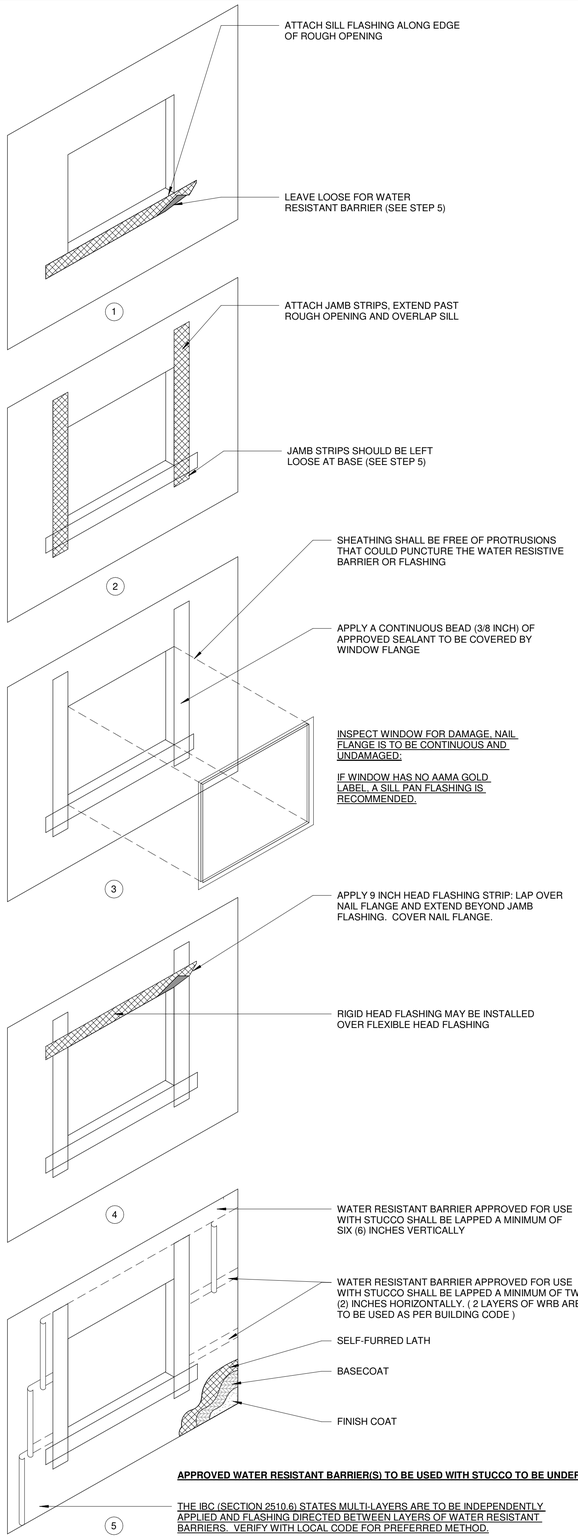

1 STUCCO DETAIL - WINDOW FLASHING
3/4" = 1'-0"

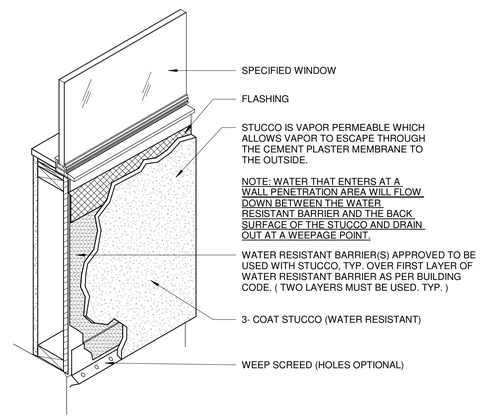

2 STUCCO DETAIL - CONCEALED BARRIER
1/2" = 1'-0"

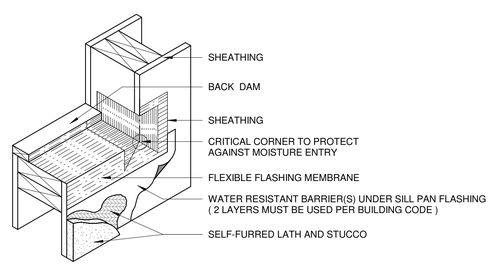

3 STUCCO DETAIL - NAIL FLANGE SILL PAN
1/2" = 1'-0"

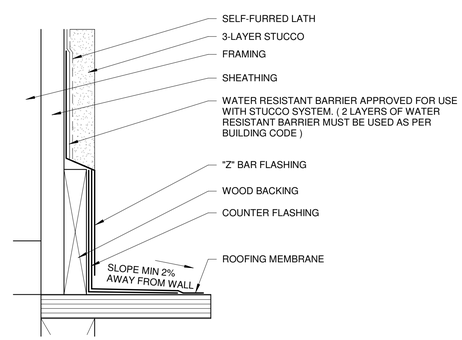

4 STUCCO DETAIL - WALL TO ROOF DECK FLASHING
1/2" = 1'-0"

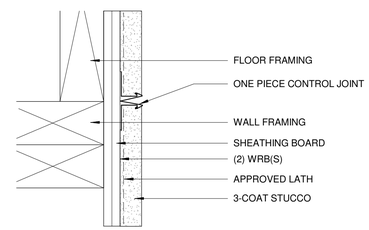

5 STUCCO DETAIL - CONTROL JOINT
1/2" = 1'-0"

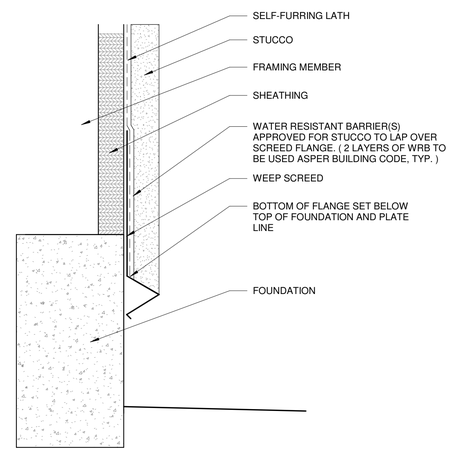

6 STUCCO DETAIL - WEEP SCREED
3/4" = 1'-0"

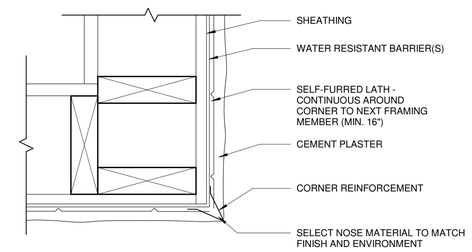

7 STUCCO CORNER DETAIL
3" = 1'-0"

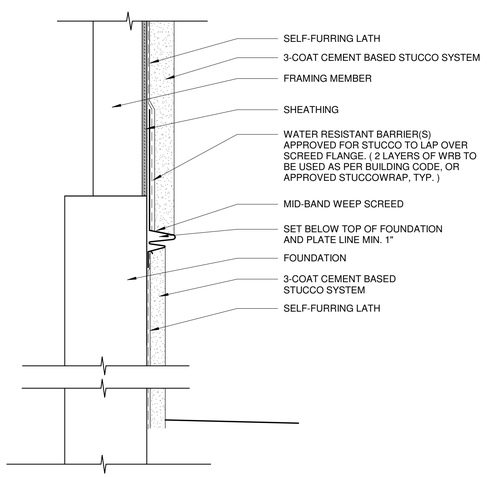

8 STUCCO DETAIL - WEEP SCREED1
1 1/2" = 1'-0"

Z+ ARCHITECTS LLC
240 WEST CRESCENT AVENUE
ALLENDALE, NJ 07401
TEL: 201.785.8855
www.zplusarchitects.com

PROJECT TEAM:

CIVIL
SCHWANEWEDE, HALS, & VINCE
111 LITTLETON RD #200
PARSIPPANY-TROY HILLS, NJ
201-337-0053

seal:

Michael Scro
NJ LIC# 18626

BALIWALA

10 BIRCH LANE, WALDWICK, NJ
City, State Zip

Copyright © 2019 , Z+ Architect, LLC

All dimensions and existing conditions shall be checked & verified by the contractor before proceeding with the work.

REV	DATE	DESCRIPTION

SHEET TITLE:

STUCCO DETAILS

DESIGN DELIVERABLE: PERMIT SET

ISSUE DATE: 06/23/25

PROJECT #: 2508

DRAWN BY: AR

CHECKED BY: MS

SHEET NUMBER:

A-803

REVIT 2020

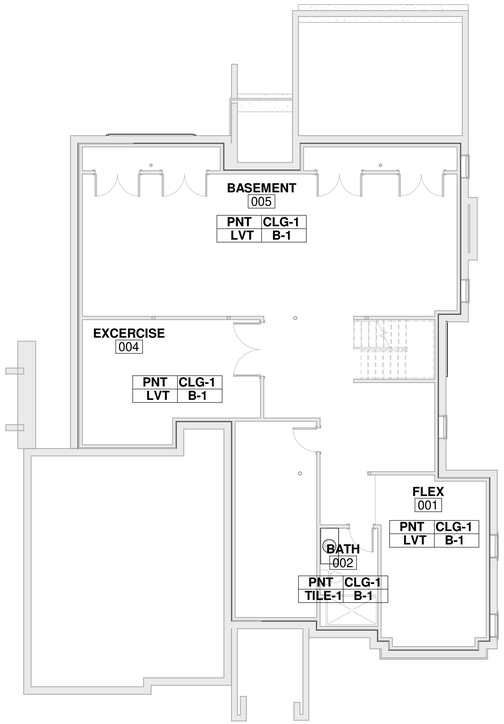

1 BASEMENT
1/8" = 1'-0"

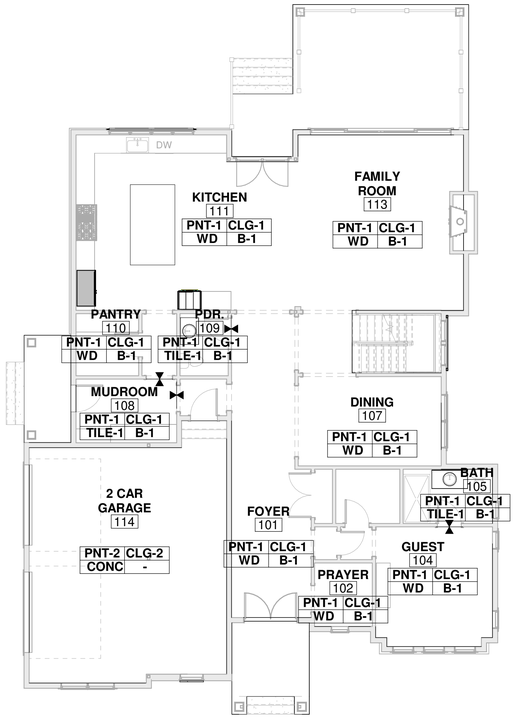

2 1ST FLOOR
1/8" = 1'-0"

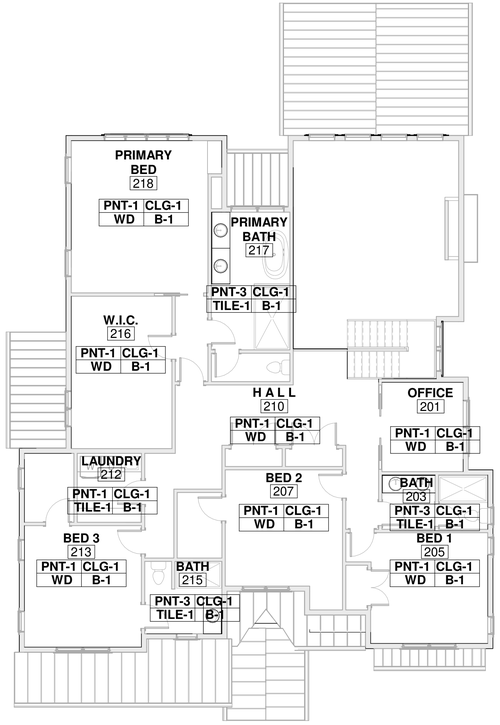

3 2ND FLOOR
1/8" = 1'-0"

FINISH KEY	
KEY	DESCRIPTION
ACT	ACOUSTIC CEILING TILE
B	BASE
CM	CROWN MOLDING
CMP	CORRUGATED METAL PANEL
CP	CONCRETE PAINTED - NO BASE
CPT	CARPET MODULAR TILE
CR	CHAIR RAIL
CS	CONCRETE SEALED - NO BASE
FT	FLOOR TILE
GYP	GYPSUM BOARD CEILING
LVT	LUXURY VINYL TILE
MS	MARBLE SADDLE
N	NO FINISH
PCT	POLISHED CONCRETE TOPPING
PL	PLASTIC LAMINATE
PNT	PAINT
RB	RESILIENT BASE
ST	STAIN
TS	TRANSITION STRIP
VCT	VINYL COMPOSITE TILE
WB	WOOD BASE
WC	WAINSCOT
WG	WOODWORKS GRILLE CEILING
WP	WALL PAPER
WT	WALL TILE

FINISH PLAN LEGEND

SYMBOL / DESCRIPTION	SYMBOL	DESCRIPTION
WALL FINISH MATERIAL; CEILING FINISH MATERIAL; WALL; CEILING; FLOOR; BASE; FLOOR FINISH MATERIAL; WALL BASE MATERIAL	X X	FINISH TAG
		TRANSITION STRIP SPECIFY TYPE PER FLOORING MATERIAL CHANGE
		DIRECTIONAL ARROW FOR FINISH INSTALL
X A-XXX ELEVATION TAG / SECTION TAG	X	ACCESSORIES / EQUIPMENT TAGS
	X X	EXTENTS OF FINISH

GENERAL FINISH NOTES:

1. G.C.TO PROVIDE AND INSTALL 5 1/2" BASE TRIM - KB108. G.C. TO CONFIRM FINAL SELECTION WITH HOMEOWNER PRIOR TO ORDER & INSTALL.

2. G.C.TO PROVIDE AND INSTALL 3 1/2" DOOR & WINDOW TRIM - KB107. G.C. TO CONFIRM FINAL SELECTION WITH HOMEOWNER PRIOR TO ORDER & INSTALL.

3. G.C. TO CONFIRM ALL SHOWER NICHE, BENCH, AND SHELF LOCATIONS AND SIZES WITH HOMEOWNER.

4. G.C TO PROVIDE ALLOWANCE FOR LABOR AND INSTALL OF OWNER SUPPLIED PLUBMING FIXTURES.

FINISH SCHEDULE					
NAME	DESCRIPTION	MANUFACTURER / CONTACT	STYLE / SIZE	COLOR / FINISH	REMARKS
B-1	WOOD BASE				
CLG-1	PTD GYPSUM BOARD CEILING				
CLG-2	2 LAYERS OF TYPE 'X' GYP. BD				
CM-1	CROWN MOLDING				
LVT	LUXURY VINYL FLOORING				
PNT-1	PAINT				
PNT-2	1 LAYER OF 5/8" TYPE 'X' GYP. BD				
PNT-3	PORCELAIN TILE AT SHOWER WALLS, PAINTED GYP. BD. AT REMAINDER				WATERPROOF ENTIRE SHOWER, TYP.
TILE -1	PORCELAIN TILE				

ARCHITECTS LLC
240 WEST CRESCENT AVENUE
ALLENDALE, NJ 07401
TEL: 201.785.8855
www.zplusarchitects.com

PROJECT TEAM:

CIVIL
SCHWANEWEDE, HALS, & VINCE
111 LITTLETON RD #200
PARSIPPANY-TROY HILLS, NJ
201-337-0053

seal:

Michael Scro
NJ LIC# 18626

BALIWALA

10 BIRCH LANE, WALDWICK, NJ
City, State Zip

Copyright © 2019 , Z+ Architect, LLC

All dimensions and existing conditions shall be checked & verified by the contractor before proceeding with the work.

REV	DATE	DESCRIPTION

SHEET TITLE:
FINISH PLANS

DESIGN DELIVERABLE: PERMIT SET

ISSUE DATE: 06/23/25

PROJECT #: 2508

DRAWN BY: AR

CHECKED BY: MS

SHEET NUMBER:
A-901

REVIT 2020

FRAMING NOTES

1. ALL STANDARD LUMBER TO BE D-FIR-L #1OR BETTER.
2. ■ INDICATES COLUMN LOCATION. PROVIDE FULL WIDTH BEARING.
3. □ INDICATES COLUMN LOCATION FROM ABOVE.
4. ALL HEADERS TO BE (2)-2X10'S UNLESS OTHERWISE NOTED.
5. DOUBLE STRUCTURE AROUND ALL FLOOR, CEILING, AND ROOF OPENINGS.
6. PROVIDE ACCESS TO ALL ENCLOSED CRAWL SPACE AND ATTIC.
7. VENTILATE ALL CRAWL SPACES AND ATTICS AS PER CODE MEASURED IN TOTAL FREE VENTILATION AREA.
8. JOIST AND PLATE GIRDERS SHALL HAVE FULL 3" MINIMUM BEARING AT ALL SILL PLATES.
9. ALL BRIDGING SHALL BE SOLID AND FULL DEPTH OF JOIST.
10. ALL EXTERIOR SHEATHING SHALL BE EXTERIOR GRADE, C-D PLYWOOD, 5/8" MINIMUM THICKNESS ALL SHEATHING SHALL BE NAILED WITH 6D NAIL, 6" O.C. AT EDGES AND 10" O.C. IN THE FIELD.
11. BUILT-UP GIRDERS AND HEADERS SHALL BE FASTENED TOGETHER AS FOLLOWS:
    A) FOR UP TO 3 PLIES, USE 2 ROWS OF NAILS STAGGERED AT 12" O.C., USE 10D NAILS ON 1 1/2" MEMBERS AND 16D NAILS ON 1 3/4" MEMBERS.
    B) FOR MORE THAN 3 PLIES, USE 2 ROWS OF 3/8" DIAMETER THROUGH BOLTS AT 12" O.C. STAGGERED.
12. DOUBLE FLOOR JOIST SHALL BE LOCATED UNDER ALL PARALLEL PARTITIONS.
13. SIZE OF HEADERS FOR OPENINGS IN BEARING WALLS SHALL BE AS FOLLOWS:
    A) MINIMUM HEADER SIZE FOR ANY OPENING SHALL BE 2-2X6
    B) FOR OPENINGS UP TO 3'-0" SHALL BE 2-2X6 MIN.
       FOR OPENING UP TO 4'-0" SHALL BE 2-2X8 MIN.
       FOR OPENING UP TO 5'-0" SHALL BE 2-2X10 MIN.
       FOR OPENING UP TO 6'-0" SHALL BE 2-2X12 MIN.
       FOR OPENING OVER 6'-0" WIDE SEE PLANS FOR HEADER SIZE.
14. SIZES OF STRUCTURAL MEMBERS: ALL LUMBER SIZES SPECIFIED ARE NOMINAL SIZES. ACTUAL SIZES ARE SHOWN ON THE FLOOR PLANS.
15. STRUCTURAL POSTS: ALL ISOLATED STRUCTURAL POSTS SHALL HAVE A MINIMUM DIMENSION OF FOUR (4) INCHES W/ SUBSTITUTIONS AS FOLLOWS:
    4X4 POSTS = (3) 2X4'S NAILED
    4X6 POSTS = (4) 2X4'S NAILED
    4X8 POSTS = (5) 2X4'S NAILED
16. AT ALL STEEL LOCATIONS PROVIDE STEEL COLUMNS DOWN TO FOUNDATION WALL.
17. ALL COLUMNS TO SIT ON SOLID FILLED FOUNDATION WALL.
18. ALL LVL/STEEL LAMINATED BEAMS TO BE SUPPROTED BY SQUARE PARALLAM COLUMNS, FULL WIDTH BEARING.
19. FOOTINGS ARE DESIGNED TO BEAR ON SOIL HAVING A MINIMUM SAFE BEARING VALUES OF 3000 PSF. CLEAN ALL POTHOLES AND FILL WITH 3000 PSI CONCRETE. FORM SIDES OF FOOTINGS WITH WOOD WHERE REQUIRED.
20. WHERE FOOTINGS ARE STEPPED DOWN TO EXISTING FOUNDATIONS, BOTTOMS TO BE STEPPED NOT MORE THAN TWO FEET VERTICALLY TO FOUR FEET HORIZONTALLY.
21. G.C. NOT TO BACKFILL UNTIL FIRST FLOOR DECK/STRUCTURE IS COMPLETELY FRAMED AND SHEATHED.
22. REINFORCING SHALL HAVE 3" COVER IN FOOTINGS; 2" COVER ON MAIN REINFORCEMENT IN STEM WALLS.
23. REINFORCING BARS ARE CONTINUOUS UNLESS OTHERWISE NOTED. LAP MESH 12 INCHES AT SPLICES, LAP STEM WALL BARS 32 BAR DIAMETER AT SPLICES (MIN).
24. BEAM, GIRDER AND OTHER CONCENTRATED LOADS SHALL BE PROVIDED WITH A BEARING OF SOLID MASONRY OR HOLLOW UNIT MASONRY FILLED SOLID WITH MINIMUM 2,500 PSI COMPRESSIVE STRENGTH CONCRETE FULL HEIGHT OF WALL OR PIER.
26. THERE SHALL BE A MINIMUM OF TWO ANCHOR BOLTS PER SECTIONS OF PLATE AND ANCHOR BOLTS SHALL BE PLACED WITHIN TWELVE (12) INCHES FROM END OF EACH SECTION OF PLATE WITH INTERMEDIATE BOLTS SPACED A MAX. OF 8'-0" O.C. METAL STRIPS MAY BE USED AS AN OPTION. (GORDON FA-22 3'-8" O.C.)

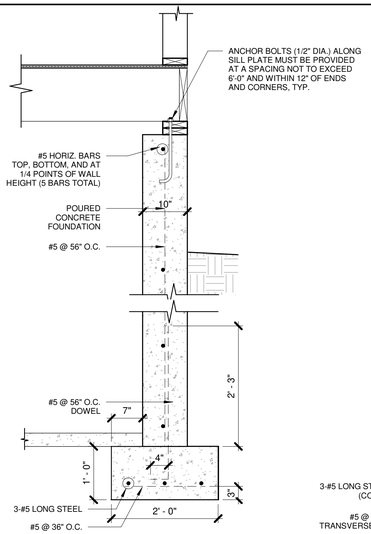

1 FOOTING SECTION F1-F1
3/4" = 1'-0"

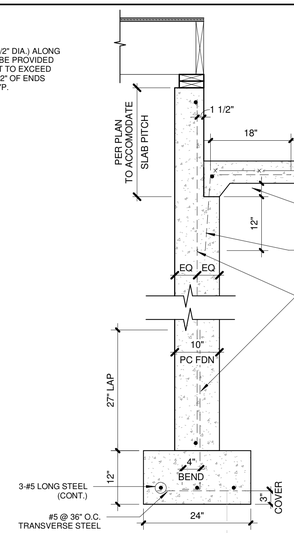

2 FOOTING SECTION F2-F2
3/4" = 1'-0"

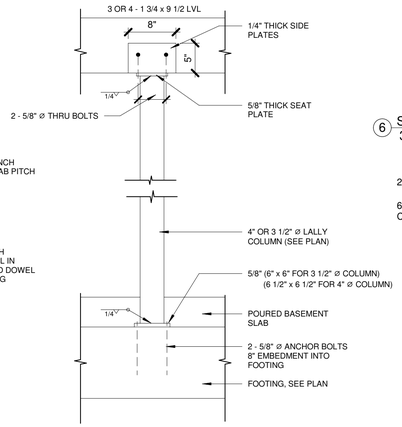

5 DETAIL C1
1" = 1'-0"

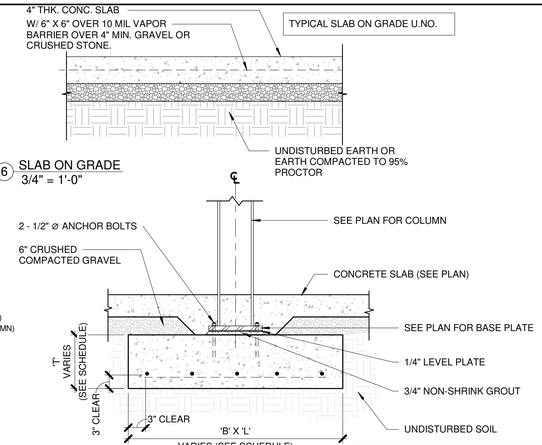

NOTE: FOR FOOTING AND REINF. SIZE, SEE PLAN AND SCHEDULE

6 SLAB ON GRADE
3/4" = 1'-0"

7 DETAIL @ STEEL COLUMN
3/4" = 1'-0"

FOOTING TABLE			
FTG. DESIGNATION	'B' X 'L'	'T'	REINFORCEMENT
F 2.50	2' - 6" x 2' - 6"	10"	3 - #5 EA. WAY
F 3.00	3' - 0" x 3' - 0"	12"	4 - #5 EA. WAY
F 3.33	3' - 4" x 3' - 4"	12"	4 - #5 EA. WAY

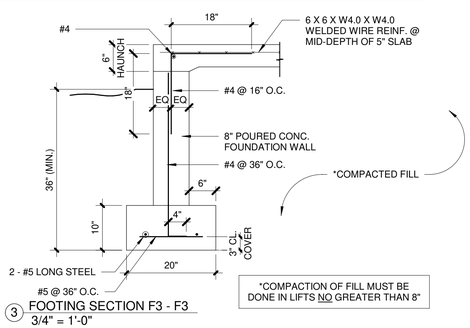

*COMPACTION OF FILL MUST BE DONE IN LIFTS NO GREATER THAN 8"

3 FOOTING SECTION F3 - F3
3/4" = 1'-0"

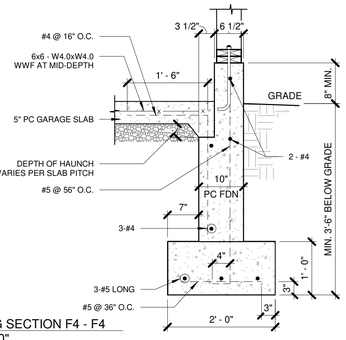

4 FOOTING SECTION F4 - F4
3/4" = 1'-0"

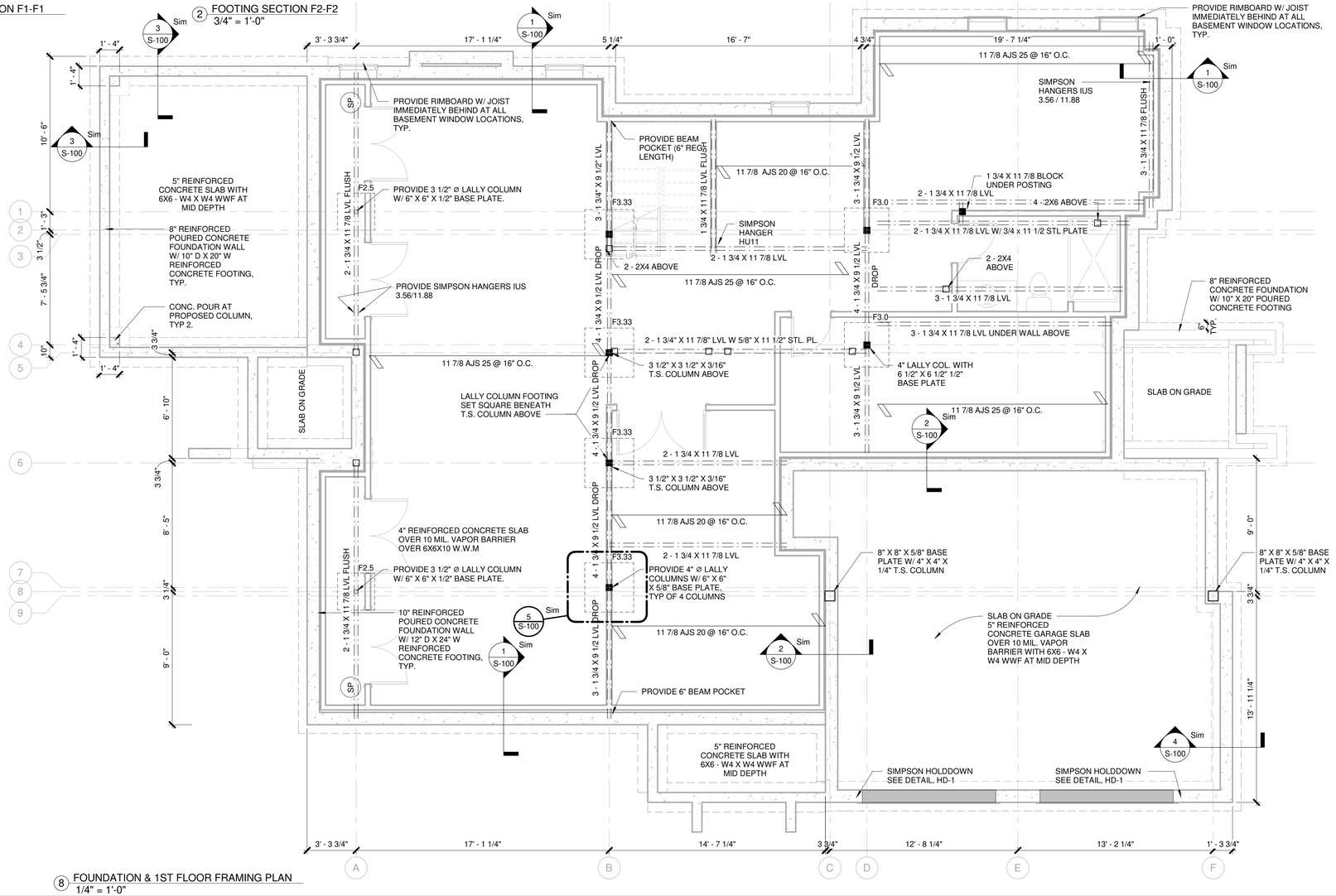

8 FOUNDATION & 1ST FLOOR FRAMING PLAN
1/4" = 1'-0"

ZL ARCHITECTS
240 WEST CRESCENT AVENUE
ALLENDALE, NJ 07401
TEL: 201.785.8855
www.zpluararchitects.com

PROJECT TEAM:

CIVIL
SCHWANEWEDE, HALS, & VINCE
111 LITTLETON RD #200
PARSIPPANY-TROY HILLS, NJ
201-337-0053

seal:

Michael Scro
NJ LIC# 18626

BALIWALA

10 BIRCH LANE, WALDWICK, NJ
City, State Zip

Copyright © 2019 , Z+ Architect, LLC

All dimensions and existing conditions shall be checked & verified by the contractor before proceeding with the work.

REV	DATE	DESCRIPTION

SHEET TITLE:

FOUNDATION & FIRST FLOOR FRAMING PLAN

DESIGN DELIVERABLE: PERMIT SET

ISSUE DATE: 06/23/25

PROJECT #: 2508

DRAWN BY: AR

CHECKED BY: MS

SHEET NUMBER:

S-100

REVIT 2020

FRAMING NOTES

1. ALL STANDARD LUMBER TO BE D-FIR-L #1OR BETTER.
2. ■ INDICATES COLUMN LOCATION. PROVIDE FULL WIDTH BEARING.
3. □ INDICATES COLUMN LOCATION FROM ABOVE.
4. ALL HEADERS TO BE (2)-2X10'S UNLESS OTHERWISE NOTED.
5. DOUBLE STRUCTURE AROUND ALL FLOOR, CEILING, AND ROOF OPENINGS.
6. PROVIDE ACCESS TO ALL ENCLOSED CRAWL SPACE AND ATTIC.
7. VENTILATE ALL CRAWL SPACES AND ATTICS AS PER CODE MEASURED IN TOTAL FREE VENTILATION AREA.
8. JOIST AND PLATE GIRDERS SHALL HAVE FULL 3" MINIMUM BEARING AT ALL SILL PLATES.
9. ALL BRIDGING SHALL BE SOLID AND FULL DEPTH OF JOIST.
10. ALL EXTERIOR SHEATHING SHALL BE EXTERIOR GRADE, C-D PLYWOOD, 5/8" MINIMUM THICKNESS ALL SHEATHING SHALL BE NAILED WITH 6D NAIL, 6" O.C. AT EDGES AND 10" O.C. IN THE FIELD.
11. BUILT-UP GIRDERS AND HEADERS SHALL BE FASTENED TOGETHER AS FOLLOWS:
    A) FOR UP TO 3 PLIES, USE 2 ROWS OF NAILS STAGGERED AT 12" O.C., USE 10D NAILS ON 1 1/2" MEMBERS AND 16D NAILS ON 1 3/4" MEMBERS.
    B) FOR MORE THAN 3 PLIES, USE 2 ROWS OF 3/8" DIAMETER THROUGH BOLTS AT 12" O.C. STAGGERED.
12. DOUBLE FLOOR JOIST SHALL BE LOCATED UNDER ALL PARALLEL PARTITIONS.
13. SIZE OF HEADERS FOR OPENINGS IN BEARING WALLS SHALL BE AS FOLLOWS:
    A) MINIMUM HEADER SIZE FOR ANY OPENING SHALL BE 2-2X6
    B) FOR OPENINGS UP TO 3'-0" SHALL BE 2-2X6 MIN.
    FOR OPENING UP TO 4'-0" SHALL BE 2-2X8 MIN.
    FOR OPENING UP TO 5'-0" SHALL BE 2-2X10 MIN.
    FOR OPENING UP TO 6'-0" SHALL BE 2-2X12 MIN.
    FOR OPENING OVER 6'-0" WIDE SEE PLANS FOR HEADER SIZE.
14. SIZES OF STRUCTURAL MEMBERS: ALL LUMBER SIZES SPECIFIED ARE NOMINAL SIZES. ACTUAL SIZES ARE SHOWN ON THE FLOOR PLANS.
15. STRUCTURAL POSTS: ALL ISOLATED STRUCTURAL POSTS SHALL HAVE A MINIMUM DIMENSION OF FOUR (4) INCHES W/ SUBSTITUTIONS AS FOLLOWS:
    4X4 POSTS = (3) 2X4'S NAILED
    4X6 POSTS = (4) 2X4'S NAILED
    4X8 POSTS = (5) 2X4'S NAILED
16. AT ALL STEEL LOCATIONS PROVIDE STEEL COLUMNS DOWN TO FOUNDATION WALL.
17. ALL COLUMNS TO SIT ON SOLID FILLED FOUNDATION WALL.
18. ALL LVL/STEEL LAMINATED BEAMS TO BE SUPPROTED BY SQUARE PARALLAM COLUMNS, FULL WIDTH BEARING.
19. FOOTINGS ARE DESIGNED TO BEAR ON SOIL HAVING A MINIMUM SAFE BEARING VALUES OF 3000 PSF. CLEAN ALL POTHOLES AND FILL WITH 3000 PSI CONCRETE. FORM SIDES OF FOOTINGS WITH WOOD WHERE REQUIRED.
20. WHERE FOOTINGS ARE STEPPED DOWN TO EXISTING FOUNDATIONS, BOTTOMS TO BE STEPPED NOT MORE THAN TWO FEET VERTICALLY TO FOUR FEET HORIZONTALLY.
21. G.C. NOT TO BACKFILL UNTIL FIRST FLOOR DECK/STRUCTURE IS COMPLETELY FRAMED AND SHEATHED.
22. REINFORCING SHALL HAVE 3" COVER IN FOOTINGS; 2" COVER ON MAIN REINFORCEMENT IN STEM WALLS.
23. REINFORCING BARS ARE CONTINUOUS UNLESS OTHERWISE NOTED. LAP MESH 12 INCHES AT SPLICES, LAP STEM WALL BARS 32 BAR DIAMETER AT SPLICES (MIN).
24. BEAM, GIRDER AND OTHER CONCENTRATED LOADS SHALL BE PROVIDED WITH A BEARING OF SOLID MASONRY OR HOLLOW UNIT MASONRY FILLED SOLID WITH MINIMUM 2,500 PSI COMPRESSIVE STRENGTH CONCRETE FULL HEIGHT OF WALL OR PIER.
26. THERE SHALL BE A MINIMUM OF TWO ANCHOR BOLTS PER SECTIONS OF PLATE AND ANCHOR BOLTS SHALL BE PLACED WITHIN TWELVE (12) INCHES FROM END OF EACH SECTION OF PLATE WITH INTERMEDIATE BOLTS SPACED A MAX. OF 8'-0" O.C. METAL STRIPS MAY BE USED AS AN OPTION. (GORDON FA-22 3'-8" O.C.)

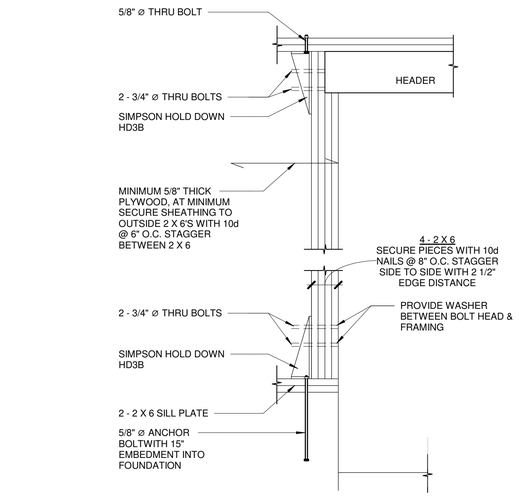

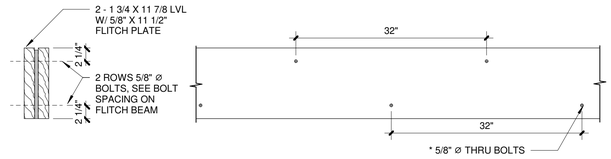

4 FLITCH BEAM BOLTING
1" = 1'-0"

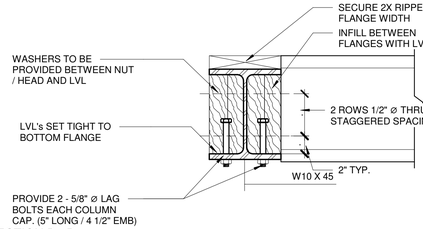

3 SECTION B - B
1 1/2" = 1'-0"

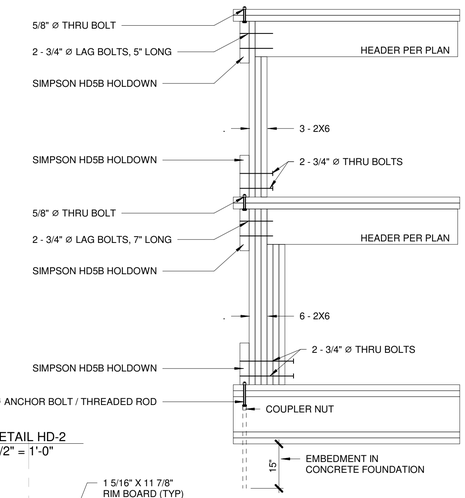

8 DETAIL HD-2
1/2" = 1'-0"

2 DETAIL HD-1
3/4" = 1'-0"

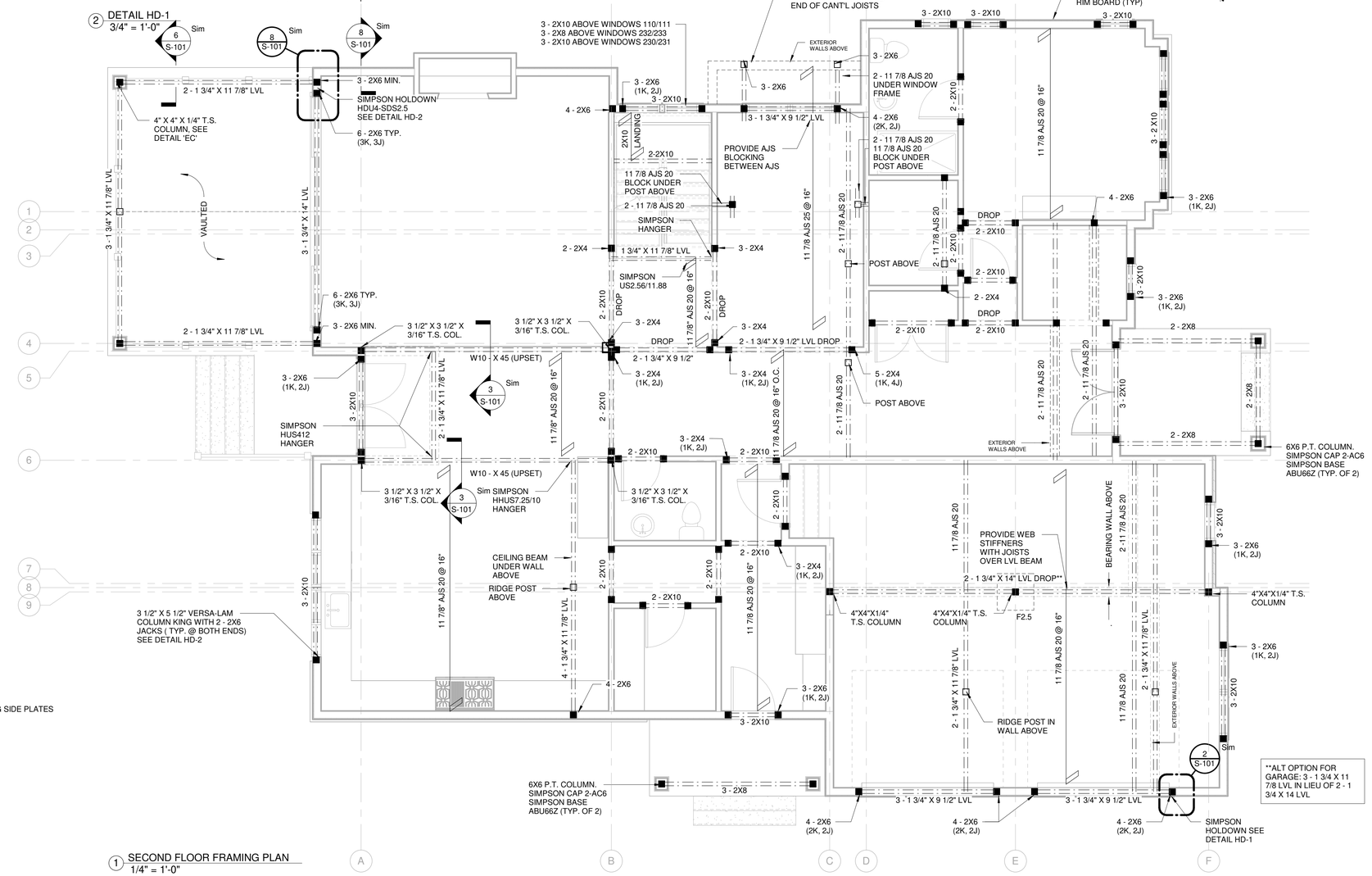

**ALT OPTION FOR GARAGE: 3 - 1 3/4 X 11 7/8 LVL IN LIEU OF 2 - 1 3/4 X 14 LVL

1 SECOND FLOOR FRAMING PLAN
1/4" = 1'-0"

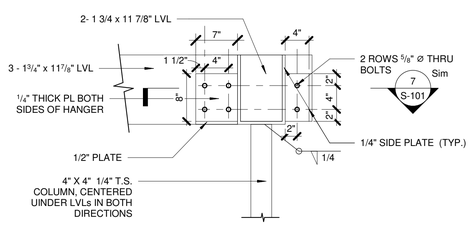

6 DETAIL 'EC'
1" = 1'-0"

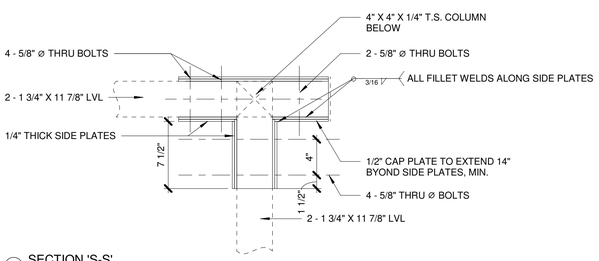

7 SECTION 'S-S'
1 1/2" = 1'-0"

ARCHITECTS LLC
240 WEST CRESCENT AVENUE
ALLENDALE, NJ 07401
TEL: 201.785.8855
www.zplusarchitects.com

PROJECT TEAM:

CIVIL
SCHWANEWEDE, HALS, & VINCE
111 LITTLETON RD #200
PARSIPPANY-TROY HILLS, NJ
201-337-0053

seal:

Michael Scro
NJ LIC# 18626

BALIWALA

10 BIRCH LANE, WALDWICK, NJ
City, State Zip

Copyright © 2019 Z+ Architect, LLC

All dimensions and existing conditions shall be checked & verified by the contractor before proceeding with the work.

REV	DATE	DESCRIPTION

SHEET TITLE:

SECOND FLOOR FRAMING PLAN

DESIGN DELIVERABLE: PERMIT SET

ISSUE DATE: 06/23/25

PROJECT #: 2508

DRAWN BY: AR

CHECKED BY: MS

SHEET NUMBER:

S-101

REVIT 2020

FRAMING NOTES

1. ALL STANDARD LUMBER TO BE D-FIR-L #1OR BETTER.

2. ■ INDICATES COLUMN LOCATION. PROVIDE FULL WIDTH BEARING.

3 □ INDICATES COLUMN LOCATION FROM ABOVE.

4. ALL HEADERS TO BE (2)-2X10'S UNLESS OTHERWISE NOTED.

5. DOUBLE STRUCTURE AROUND ALL FLOOR, CEILING, AND ROOF OPENINGS.

6. PROVIDE ACCESS TO ALL ENCLOSED CRAWL SPACE AND ATTIC.

7. VENTILATE ALL CRAWL SPACES AND ATTICS AS PER CODE MEASURED IN TOTAL FREE VENTILATION AREA.

8. JOIST AND PLATE GIRDERS SHALL HAVE FULL 3" MINIMUM BEARING AT ALL SILL PLATES.

9. ALL BRIDGING SHALL BE SOLID AND FULL DEPTH OF JOIST.

10. ALL EXTERIOR SHEATHING SHALL BE EXTERIOR GRADE, C-D PLYWOOD, 5/8" MINIMUM THICKNESS ALL SHEATHING SHALL BE NAILED WITH 6D NAIL, 6" O.C. AT EDGES AND 10" O.C. IN THE FIELD.

11. BUILT-UP GIRDERS AND HEADERS SHALL BE FASTENED TOGETHER AS FOLLOWS:
    - A) FOR UP TO 3 PLIES, USE 2 ROWS OF NAILS STAGGERED AT 12" O.C., USE 10D NAILS ON 1 1/2" MEMBERS AND 16D NAILS ON 1 3/4" MEMBERS.
    - B) FOR MORE THAN 3 PLIES, USE 2 ROWS OF 3/8" DIAMETER THROUGH BOLTS AT 12" O.C. STAGGERED.

12. DOUBLE FLOOR JOIST SHALL BE LOCATED UNDER ALL PARALLEL PARTITIONS.

13. SIZE OF HEADERS FOR OPENINGS IN BEARING WALLS SHALL BE AS FOLLOWS:
    - A) MINIMUM HEADER SIZE FOR ANY OPENING SHALL BE 2-2X6
    - B) FOR OPENINGS UP TO 3'-0" SHALL BE 2-2X6 MIN.
      FOR OPENING UP TO 4'-0" SHALL BE 2-2X8 MIN.
      FOR OPENING UP TO 5'-0" SHALL BE 2-2X10 MIN.
      FOR OPENING UP TO 6'-0" SHALL BE 2-2X12 MIN.
      FOR OPENING OVER 6'-0" WIDE SEE PLANS FOR HEADER SIZE.

14. SIZES OF STRUCTURAL MEMBERS: ALL LUMBER SIZES SPECIFIED ARE NOMINAL SIZES. ACTUAL SIZES ARE SHOWN ON THE FLOOR PLANS.

15. STRUCTURAL POSTS: ALL ISOLATED STRUCTURAL POSTS SHALL HAVE A MINIMUM DIMENSION OF FOUR (4) INCHES W/ SUBSTITUTIONS AS FOLLOWS:
    4X4 POSTS = (3) 2X4'S NAILED
    4X6 POSTS = (4) 2X4'S NAILED
    4X8 POSTS = (5) 2X4'S NAILED

16. AT ALL STEEL LOCATIONS PROVIDE STEEL COLUMNS DOWN TO FOUNDATION WALL.

17. ALL COLUMNS TO SIT ON SOLID FILLED FOUNDATION WALL.

18. ALL LVL/STEEL LAMINATED BEAMS TO BE SUPPROTED BY SQUARE PARALLAM COLUMNS, FULL WIDTH BEARING.

19. FOOTINGS ARE DESIGNED TO BEAR ON SOIL HAVING A MINIMUM SAFE BEARING VALUES OF 3000 PSF. CLEAN ALL POTHOLES AND FILL WITH 3000 PSI CONCRETE. FORM SIDES OF FOOTINGS WITH WOOD WHERE REQUIRED.

20. WHERE FOOTINGS ARE STEPPED DOWN TO EXISTING FOUNDATIONS, BOTTOMS TO BE STEPPED NOT MORE THAN TWO FEET VERTICALLY TO FOUR FEET HORIZONTALLY.

21. G.C. NOT TO BACKFILL UNTIL FIRST FLOOR DECK/STRUCTURE IS COMPLETELY FRAMED AND SHEATHED.

22. REINFORCING SHALL HAVE 3" COVER IN FOOTINGS; 2" COVER ON MAIN REINFORCEMENT IN STEM WALLS.

23. REINFORCING BARS ARE CONTINUOUS UNLESS OTHERWISE NOTED. LAP MESH 12 INCHES AT SPLICES, LAP STEM WALL BARS 32 BAR DIAMETER AT SPLICES (MIN).

24. BEAM, GIRDER AND OTHER CONCENTRATED LOADS SHALL BE PROVIDED WITH A BEARING OF SOLID MASONRY OR HOLLOW UNIT MASONRY FILLED SOLID WITH MINIMUM 2,500 PSI COMPRESSIVE STRENGTH CONCRETE FULL HEIGHT OF WALL OR PIER.

26. THERE SHALL BE A MINIMUM OF TWO ANCHOR BOLTS PER SECTIONS OF PLATE AND ANCHOR BOLTS SHALL BE PLACED WITHIN TWELVE (12) INCHES FROM END OF EACH SECTION OF PLATE WITH INTERMEDIATE BOLTS SPACED A MAX. OF 8'-0" O.C. METAL STRIPS MAY BE USED AS AN OPTION. (GORDON FA-22 3'-8" O.C.)

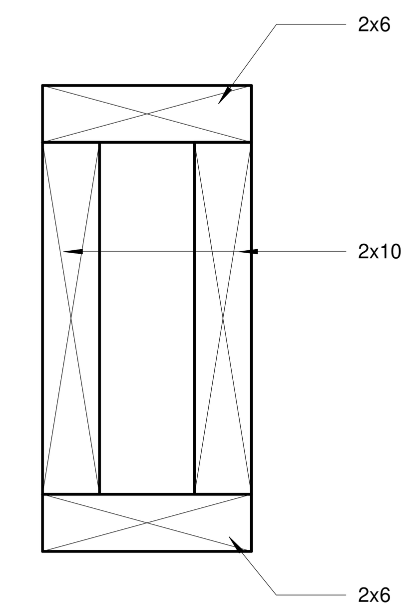

BOX HEADER
(2 - 2 x10 IN 2x6 WALLS)

(2) BOX HEADER
3" = 1'-0"

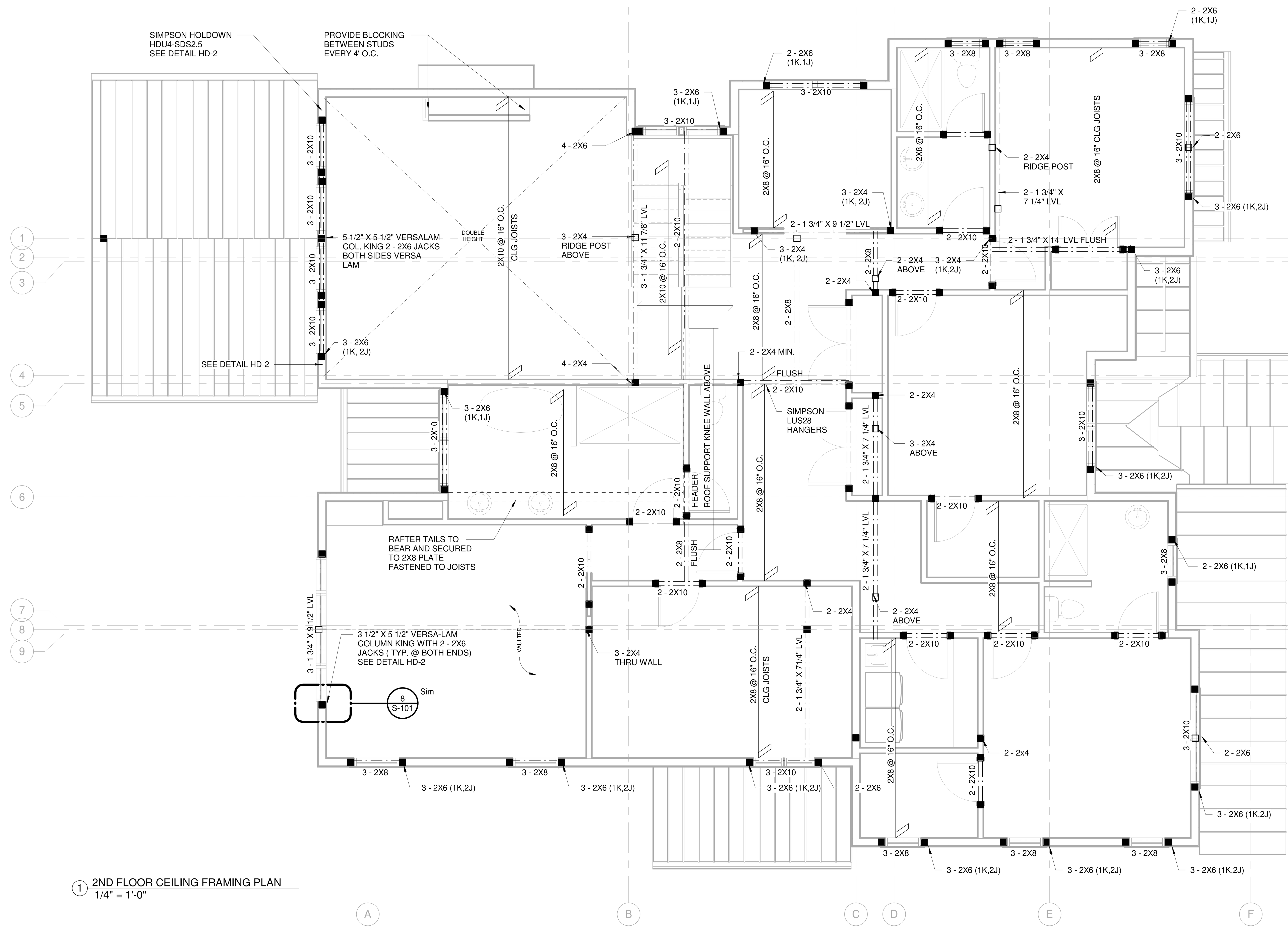

(1) 2ND FLOOR CEILING FRAMING PLAN
1/4" = 1'-0"

Z+ ARCHITECTS LLC
240 WEST CRESCENT AVENUE
ALLENDALE, NJ 07401
TEL: 201.785.8855
www.zplusarchitects.com

PROJECT TEAM:

CIVIL
SCHWANEWEDE, HALS, & VINCE
111 LITTLETON RD #200
PARSIPPANY-TROY HILLS, NJ
201-337-0053

seal:

Michael Scro
NJ LIC# 18626

BALIWALA

10 BIRCH LANE, WALDWICK, NJ
City, State Zip

Copyright © 2019 , Z+ Architect, LLC
All dimensions and existing conditions shall be checked & verified by the contractor before proceeding with the work

REV	DATE	DESCRIPTION

SHEET TITLE:

SECOND FLOOR CEILING FRAMING PLAN

DESIGN DELIVERABLE: PERMIT SET

ISSUE DATE: 06/23/25

PROJECT #: 2508

DRAWN BY: AR

CHECKED BY: MS

SHEET NUMBER: S-102

REVIT 2020

FRAMING NOTES

1. ALL STANDARD LUMBER TO BE D-FIR-L #1OR BETTER.
2. ■ INDICATES COLUMN LOCATION. PROVIDE FULL WIDTH BEARING.
3 □ INDICATES COLUMN LOCATION FROM ABOVE.
4. ALL HEADERS TO BE (2)-2X10'S UNLESS OTHERWISE NOTED.
5. DOUBLE STRUCTURE AROUND ALL FLOOR, CEILING, AND ROOF OPENINGS.
6. PROVIDE ACCESS TO ALL ENCLOSED CRAWL SPACE AND ATTIC.
7. VENTILATE ALL CRAWL SPACES AND ATTICS AS PER CODE MEASURED IN TOTAL FREE VENTILATION AREA.
8. JOIST AND PLATE GIRDERS SHALL HAVE FULL 3" MINIMUM BEARING AT ALL SILL PLATES.
9. ALL BRIDGING SHALL BE SOLID AND FULL DEPTH OF JOIST.
10. ALL EXTERIOR SHEATHING SHALL BE EXTERIOR GRADE, C-D PLYWOOD, 5/8" MINIMUM THICKNESS ALL SHEATHING SHALL BE NAILED WITH 6D NAIL, 6" O.C. AT EDGES AND 10" O.C. IN THE FIELD.
11. BUILT-UP GIRDERS AND HEADERS SHALL BE FASTENED TOGETHER AS FOLLOWS:
    A) FOR UP TO 3 PLIES, USE 2 ROWS OF NAILS STAGGERED AT 12" O.C., USE 10D NAILS ON 1 1/2" MEMBERS AND 16D NAILS ON 1 3/4" MEMBERS.
    B) FOR MORE THAN 3 PLIES, USE 2 ROWS OF 3/8" DIAMETER THROUGH BOLTS AT 12" O.C. STAGGERED.
12. DOUBLE FLOOR JOIST SHALL BE LOCATED UNDER ALL PARALLEL PARTITIONS.
13. SIZE OF HEADERS FOR OPENINGS IN BEARING WALLS SHALL BE AS FOLLOWS:
    A) MINIMUM HEADER SIZE FOR ANY OPENING SHALL BE 2-2X6
    B) FOR OPENINGS UP TO 3'-0" SHALL BE 2-2X6 MIN.
    FOR OPENING UP TO 4'-0" SHALL BE 2-2X8 MIN.
    FOR OPENING UP TO 5'-0" SHALL BE 2-2X10 MIN.
    FOR OPENING UP TO 6'-0" SHALL BE 2-2X12 MIN.
    FOR OPENING OVER 6'-0" WIDE SEE PLANS FOR HEADER SIZE.
14. SIZES OF STRUCTURAL MEMBERS: ALL LUMBER SIZES SPECIFIED ARE NOMINAL SIZES. ACTUAL SIZES ARE SHOWN ON THE FLOOR PLANS.
15. STRUCTURAL POSTS: ALL ISOLATED STRUCTURAL POSTS SHALL HAVE A MINIMUM DIMENSION OF FOUR (4) INCHES W/ SUBSTITUTIONS AS FOLLOWS:
    4X4 POSTS = (3) 2X4'S NAILED
    4X6 POSTS = (4) 2X4'S NAILED
    4X8 POSTS = (5) 2X4'S NAILED
16. AT ALL STEEL LOCATIONS PROVIDE STEEL COLUMNS DOWN TO FOUNDATION WALL.
17. ALL COLUMNS TO SIT ON SOLID FILLED FOUNDATION WALL.
18. ALL LVL/STEEL LAMINATED BEAMS TO BE SUPPROTED BY SQUARE PARALLAM COLUMNS, FULL WIDTH BEARING.
19. FOOTINGS ARE DESIGNED TO BEAR ON SOIL HAVING A MINIMUM SAFE BEARING VALUES OF 3000 PSF. CLEAN ALL POTHOLES AND FILL WITH 3000 PSI CONCRETE. FORM SIDES OF FOOTINGS WITH WOOD WHERE REQUIRED.
20. WHERE FOOTINGS ARE STEPPED DOWN TO EXISTING FOUNDATIONS, BOTTOMS TO BE STEPPED NOT MORE THAN TWO FEET VERTICALLY TO FOUR FEET HORIZONTALLY.
21. G.C. NOT TO BACKFILL UNTIL FIRST FLOOR DECK/STRUCTURE IS COMPLETELY FRAMED AND SHEATHED.
22. REINFORCING SHALL HAVE 3" COVER IN FOOTINGS; 2" COVER ON MAIN REINFORCEMENT IN STEM WALLS.
23. REINFORCING BARS ARE CONTINUOUS UNLESS OTHERWISE NOTED. LAP MESH 12 INCHES AT SPLICES, LAP STEM WALL BARS 32 BAR DIAMETER AT SPLICES (MIN).
24. BEAM, GIRDER AND OTHER CONCENTRATED LOADS SHALL BE PROVIDED WITH A BEARING OF SOLID MASONRY OR HOLLOW UNIT MASONRY FILLED SOLID WITH MINIMUM 2,500 PSI COMPRESSIVE STRENGTH CONCRETE FULL HEIGHT OF WALL OR PIER.
26. THERE SHALL BE A MINIMUM OF TWO ANCHOR BOLTS PER SECTIONS OF PLATE AND ANCHOR BOLTS SHALL BE PLACED WITHIN TWELVE (12) INCHES FROM END OF EACH SECTION OF PLATE WITH INTERMEDIATE BOLTS SPACED A MAX. OF 8'-0" O.C. METAL STRIPS MAY BE USED AS AN OPTION. (GORDON FA-22 3'-8" O.C.)

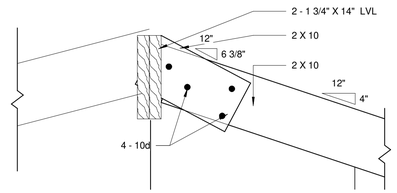

5 RIDGE DETAIL
1" = 1'-0"

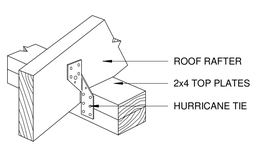

PROVIDE ONE (1) "SIMPSON STRONG-TIE" H2.5 AT EACH ROOF RAFTER OR TRUSS

3 HURRICANE TIE DETAIL
N.T.S.

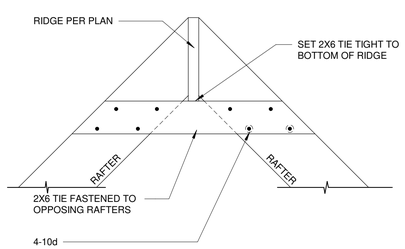

RIDGE TIE DETAIL
(NON-VAULTED CATHEDRAL AREAS

2 ROOFING DETAIL R4-R4 - RIDGE TIE DETAIL
1" = 1'-0"

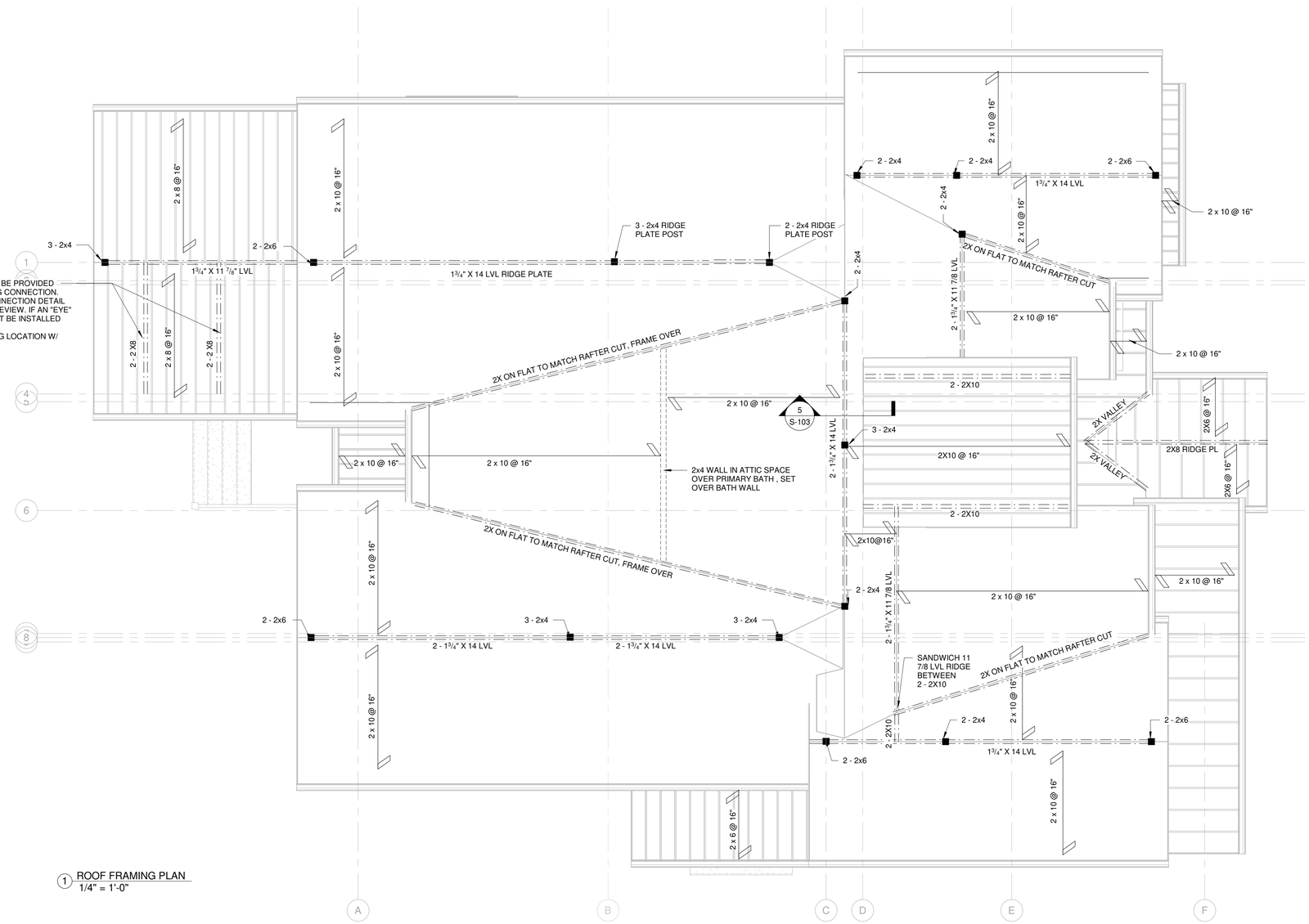

1 ROOF FRAMING PLAN
1/4" = 1'-0"

ZplusA ARCHITECTS LLC
240 WEST CRESCENT AVENUE
ALLENDALE, NJ 07401
TEL: 201.785.8855
www.zplusarchitects.com

PROJECT TEAM:

CIVIL
SCHWANEWEDE, HALS, & VINCE
111 LITTLETON RD #200
PARSIPPANY-TROY HILLS, NJ
201-337-0053

seal:

Michael Scro
NJ LIC# 18626

BALIWALA

10 BIRCH LANE, WALDWICK, NJ
City, State Zip

Copyright © 2019 , Z+ Architect, LLC

All dimensions and existing conditions shall be checked & verified by the contractor before proceeding with the work.

REV	DATE	DESCRIPTION

SHEET TITLE:
ROOF FRAMING PLAN

DESIGN DELIVERABLE: PERMIT SET
ISSUE DATE: 06/23/25
PROJECT #: 2508
DRAWN BY: AR
CHECKED BY: MS

SHEET NUMBER:
S-103

REVIT 2020

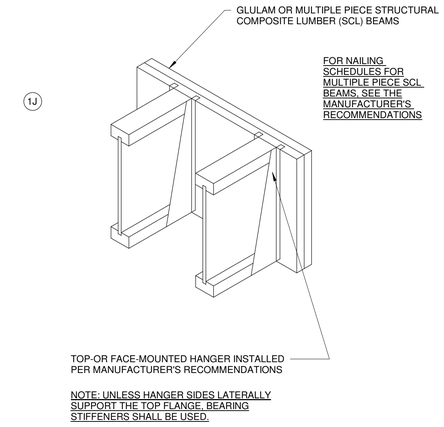

1 GLULAM DETAIL
12" = 1'-0"

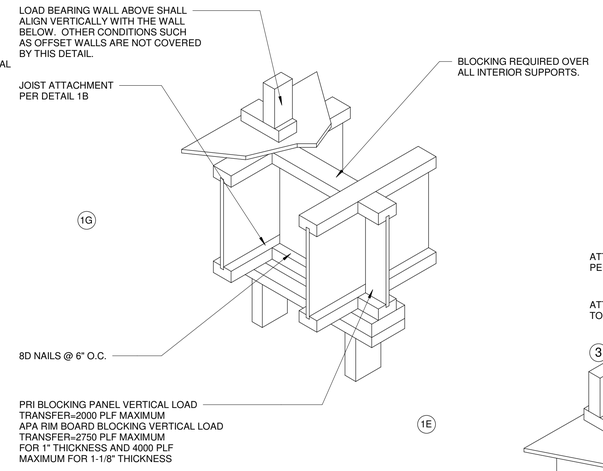

2 PRI BLOCKING DETAIL
12" = 1'-0"

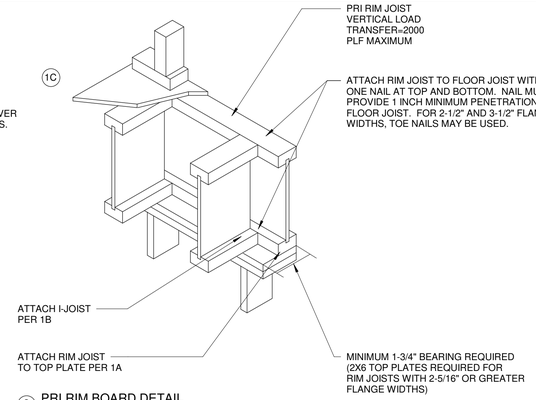

3 PRI RIM BOARD DETAIL
12" = 1'-0"

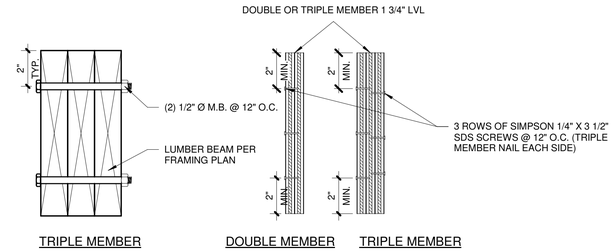

6 MULTI-MEMBER CONNECTION DETAIL
3" = 1'-0"

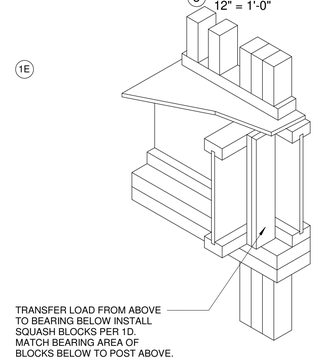

4 SOLID BLOCK DETAIL
12" = 1'-0"

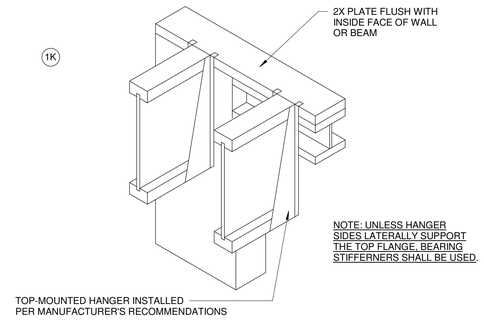

5 TOP MOUNTED HANGER DETAIL
12" = 1'-0"

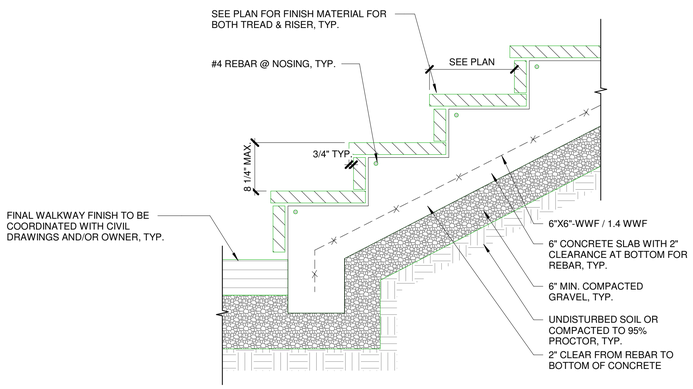

7 STAIR DETAIL - EXTERIOR - CONCRETE
1" = 1'-0"

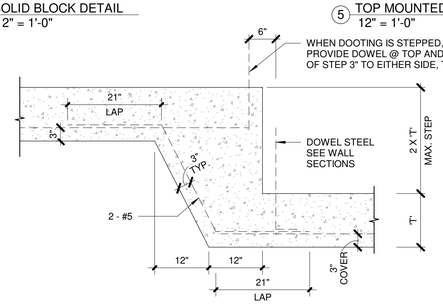

8 STEP FOOTING DETAIL
3/4" = 1'-0"

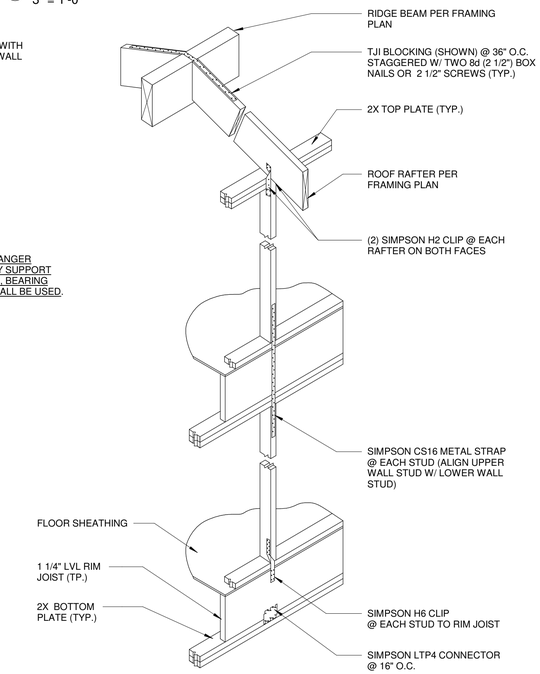

9 TYP. LOAD PATH CONNECTION DETAIL
1/2" = 1'-0"

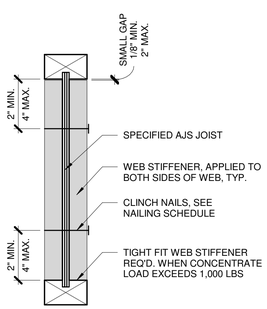

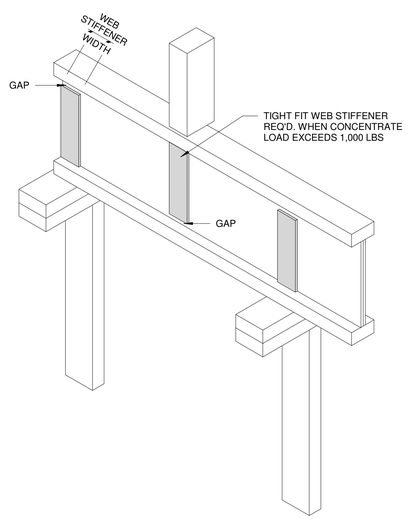

10 WEB STIFFENER DETAIL
3" = 1'-0"

WEB STIFFENER NAILING SCHEDULE

ALLJOIST® SERIES	JOIST DEPTH	NAILING
AJS® 150 / 20 / 25	9 1/2" - 11 7/8"	3 - 10 d
	14" - 24"	5 - 10 d

STRUCTURAL PANEL WEB STIFFENER

SERIES	MINIMUM THICKNESS		MINIMUM WIDTH
	IN HANGER	NO HANGER	
AJS® 150 / 20	1"	1 1/2"	2 5 1/6"
AJS® 25	2 X 4 LUMBER (VERTICAL)		

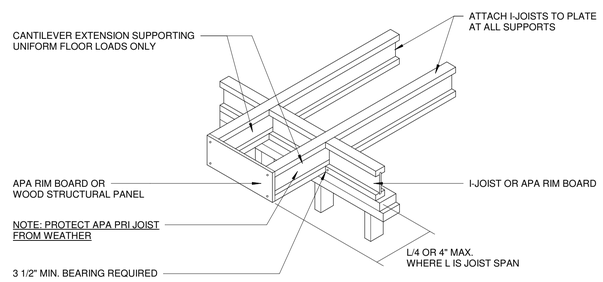

CAUTION: CANTILEVERS FORMED THIS WAY MUST BE CAREFULLY DETAILED TO PREVENT MOSITURE INTRUSION INTO THE STRUCTURE AND POTENTIAL DECAY OF UN-TREATED I-JOIST EXTENSIONS.

11 I-JOIST CANTILEVER DETAIL FOR BALCONY
1/2" = 1'-0"

Z+ ARCHITECTS LLC
240 WEST CRESCENT AVENUE
ALLENDALE, NJ 07401
TEL: 201.785.8855
www.zplusarchitects.com

PROJECT TEAM:

CIVIL
SCHWANEWEDE, HALS, & VINCE
111 LITTLETON RD #200
PARSIPPANY-TROY HILLS, NJ
201-337-0053

seal:

Michael Scro
NJ LIC# 18626

BALIWALA

10 BIRCH LANE, WALDWICK, NJ
City, State Zip

Copyright © 2019 , Z+ Architect, LLC

All dimensions and existing conditions shall be checked & verified by the contractor before proceeding with the work.

REV	DATE	DESCRIPTION

SHEET TITLE:
STRUCTURAL DETAILS

DESIGN DELIVERABLE: PERMIT SET

ISSUE DATE: 06/23/25

PROJECT #: 2508

DRAWN BY: AR

CHECKED BY: MS

SHEET NUMBER:
S-105

REVIT 2020

2 BASEMENT ELECTRICAL PLAN
1/4" = 1'-0"

ELECTRICAL LEGEND & SYMBOLS

- LIGHT SWITCH
- DIMMER SWITCH
- 3-WAY SWITCH
- 4-WAY SWITCH
- DUPLEX OUTLET
- GROUND FAULT INTERRUPT OUTLET
- WEATHER PROOF OUTLET
- DEDICATED OUTLET
- RECESSED FLOOR OUTLET
- TELEPHONE / CAT 5 / T.V. CABLE JACK
- WALL MOUNTED LIGHT FIXTURE
- WALL MOUNTED CLOSET RATED FIXTURE
- RECESSED PANASONIC WHISPER EXHAUST FAN
- HALO, 4" RECESSED LED WALL WASH WITH BAFFLE; 992W
- 120V AC SMOKE & CARBON MONOXIDE ALARM W/ BATTERY BACK UP; FIRST ALERT MODEL:SC9120B
- 120V AC SMOKE ALARM W/ BATTERY BACK UP; FIRST ALERT MODEL: 9120B
- DMF LIGHTING, H SERIES, 4" RECESSED, HM3C MODULE WITH INTEGRATED WARM DIM, IEC RATED, WET LOCATIONS. *(BAR HANGERS ARE AVAILABLE FROM MANUFACTURE)*
  - FINAL TRIM OPTIONS TO BE SELECTED BY OWNER
- SURFACE MOUNTED LIGHT FIXTURE
- SURFACE MOUNTED LIGHT FIXTURE WITH FAN
- LOW VOLTAGE UNDER CABINET LIGHT
- LED 1 x 4 FIXTURE

GENERAL NOTES:

1. SMOKE ALARMS SHALL BE LISTED IN ACCORDANCE WITH UL 217 AND INSTALLED PER NFPA 72 AND IBC RESIDENTIAL 2021 - NJ EDITION.
2. ALL ALARMS SHALL BE INTERCONNECTED IN SUCH A MANNER THAT THE ACTUATION OF ONE ALARM WILL ACTIVATE ALL OF THE ALARMS.
3. ALL SPECIFIED RECESSED LIGHTS TO BE NON-IC RATED EXCEPT AT THE FOLLOWING LOCATIONS :
   A) IC-RATED RECESSED CAN LIGHT AT INSULATED CEILING.
   B) UL/CUL LISTED RECESSED CAN LIGHT AT SHOWER AND OTHER MOISTURE AREA.
   C) INSTALL FIREBOX AT FIRE RATED CEILING ASSEMBLIES.
4. CONTRACTOR TO PROVIDE HARD WIRING FOR NEW SMOKE DETECTORS AND/OR CARBON MONOXIDE/SMOKE DETECTOR COMBOS AS REQUIRED BY CODE. ONE SHALL BE LOCATED IN EACH SLEEPING ROOM, OUTSIDE EACH SEPARATE SLEEPING AREA IN THE IMMEDIATE VICINITY OF THE BEDROOMS, AND ONE ON EACH FLOOR, INCLUDING BASEMENTS AND HABITABLE ATTICS.
5. ALL ELECTRICAL WIRING DEVICES TO BE LEVITON - DECORA OR APPROVED EQUAL.
6. VERIFY IN FIELD FINAL LOCATION OF SWITCHES, OUTLETS, AND DATA PORTS WITH OWNER.
7. ALL OUTLET LOCATIONS SHOWN ARE DIAGRAMMATIC. ALL WALL PENETRATIONS BETWEEN DEMISING / FIRE RATED WALLS INCLUDING (BUT NOT LIMITED TO) ELECTRICAL AND TEL/DATA OUTLETS SHALL BE STAGGERED SO THAT A MINIMUM OF 24" IS BETWEEN TWO OUTLETS OF EITHER SIDE OF WALL. OFFSET BOXES MINIMUM (1) STUD SPACE AND SEAL OPENINGS THROUGH THE PARITIONS AND FLOORS TO MAINTAIN ASSEMBLY RATING. ENTIRE ELECTRICAL BOX MUST BE SEALED WITH FIRE RESISTANT SEALANT AS PER NFPA.
8. ALL CONVENIENCE OUTLETS WITH SWITCHES TO BE SWITCHED AT TOP ONLY.
9. ALL SWITCHES TO BE 3'-10" ABOVE FINISHED FLOOR TO CENTERLINE OF SWITCH UNLESS OTHERWISE NOTED.
10. ALL CONVENIENCE OUTLETS ARE TO BE NO LOWER THAN 15" TO THE BOTTOM RECEPTACLE.
11. ALL INTERIOR WALL BRACKET FIXTURES TO BE AT 6'-6" ABOVE FINISHED FLOOR TO CENTERLINE OF FIXTURES (6'-10" AT BATHROOM MIRRORS).
12. ALL EXTERIOR BRACKET FIXTURES TO BE AT 6'-6" ABOVE FINISHED FLOOR TO CENTERLINE OF FIXTURE.
13. VERIFY LOCATION OF ALL RECEPTACLE FOR APPLIANCES WITH MANUFACTURER'S SPECIFICATIONS.
14. CABLE TELEVISION SERVICE SHALL BE WIRED TO EVERY TELEVISION RECEPTACLE,UNLESS OTHERWISE INSTRUCTED BY OWNER.
15. ALL ELECTRICAL INSTALLATION SHALL MEET THE REQUIREMENTS OF THE NATIONAL ELECTRICAL CODE. ALL MATERIAL AND EQUIPMENT SHALL BEAR THE LABEL OR APPROVALOF THE UNDERWRITERS LABORATORIES, INC.
16. ALL BATHROOM GFI OUTLETS TO BE DEDICATED TO (1) 20 AMP BREAKER.
17. GROUND FAULT INTERCEPTORS SHALL BE PROVIDED AT ALL BATHROOM AND KITCHEN OUTLETS AS PER SECTION 2-10-8 N.E.C.

Z+ ARCHITECTS LLC
240 WEST CRESCENT AVENUE
ALLENDALE, NJ 07401
TEL: 201.785.8855
www.zplusarchitects.com

PROJECT TEAM:

CIVIL
SCHWANEWEDE, HALS, & VINCE
111 LITTLETON RD #200
PARSIPPANY-TROY HILLS, NJ
201-337-0053

seal:

Michael Scro
NJ LIC# 18626

BALIWALA

10 BIRCH LANE, WALDWICK, NJ
City, State Zip

Copyright © 2019 , Z+ Architect, LLC

All dimensions and existing conditions shall be checked & verified by the contractor before proceeding with the work

REV	DATE	DESCRIPTION

SHEET TITLE:

BASEMENT ELECTRICAL PLAN

DESIGN DELIVERABLE: PERMIT SET

ISSUE DATE: 06/23/25

PROJECT #: 2508

DRAWN BY: AR

CHECKED BY: MS

SHEET NUMBER:

E-1

REVIT 2020

1 1ST FLOOR ELECTRICAL PLAN
1/4" = 1'-0"

ELECTRICAL LEGEND & SYMBOLS

- LIGHT SWITCH
- DIMMER SWITCH
- 3-WAY SWITCH
- 4-WAY SWITCH
- DUPLEX OUTLET
- GROUND FAULT INTERRUPT OUTLET
- WEATHER PROOF OUTLET
- DEDICATED OUTLET
- RECESSED FLOOR OUTLET
- TELEPHONE / CAT 5 / T.V. CABLE JACK
- WALL MOUNTED LIGHT FIXTURE
- WALL MOUNTED CLOSET RATED FIXTURE
- RECESSED PANASONIC WHISPER EXHAUST FAN
- HALO, 4" RECESSED LED WALL WASH WITH BAFFLE; 992W
- 120V AC SMOKE & CARBON MONOXIDE ALARM W/ BATTERY BACK UP; FIRST ALERT MODEL:SC9120B
- 120V AC SMOKE ALARM W/ BATTERY BACK UP; FIRST ALERT MODEL: 9120B
- DMF LIGHTING, H SERIES, 4" RECESSED, HM3C MODULE WITH INTEGRATED WARM DIM, IEC RATED, WET LOCATIONS. *(BAR HANGERS ARE AVAILABLE FROM MANUFACTURE)*
  - FINAL TRIM OPTIONS TO BE SELECTED BY OWNER
- SURFACE MOUNTED LIGHT FIXTURE
- SURFACE MOUNTED LIGHT FIXTURE WITH FAN
- LOW VOLTAGE UNDER CABINET LIGHT
- LED 1 x 4 FIXTURE

GENERAL NOTES:

1. SMOKE ALARMS SHALL BE LISTED IN ACCORDANCE WITH UL 217 AND INSTALLED PER NFPA 72 AND IBC RESIDENTIAL 2021 - NJ EDITION.
2. ALL ALARMS SHALL BE INTERCONNECTED IN SUCH A MANNER THAT THE ACTUATION OF ONE ALARM WILL ACTIVATE ALL OF THE ALARMS.
3. ALL SPECIFIED RECESSED LIGHTS TO BE NON-IC RATED EXCEPT AT THE FOLLOWING LOCATIONS :
   A) IC-RATED RECESSED CAN LIGHT AT INSULATED CEILING.
   B) UL/CUL LISTED RECESSED CAN LIGHT AT SHOWER AND OTHER MOISTURE AREA.
   C) INSTALL FIREBOX AT FIRE RATED CEILING ASSEMBLIES.
4. CONTRACTOR TO PROVIDE HARD WIRING FOR NEW SMOKE DETECTORS AND/OR CARBON MONOXIDE/SMOKE DETECTOR COMBOS AS REQUIRED BY CODE. ONE SHALL BE LOCATED IN EACH SLEEPING ROOM, OUTSIDE EACH SEPARATE SLEEPING AREA IN THE IMMEDIATE VICINITY OF THE BEDROOMS, AND ONE ON EACH FLOOR, INCLUDING BASEMENTS AND HABITABLE ATTICS.
5. ALL ELECTRICAL WIRING DEVICES TO BE LEVITON - DECORA OR APPROVED EQUAL.
6. VERIFY IN FIELD FINAL LOCATION OF SWITCHES, OUTLETS, AND DATA PORTS WITH OWNER.
7. ALL OUTLET LOCATIONS SHOWN ARE DIAGRAMMATIC. ALL WALL PENETRATIONS BETWEEN DEMISING / FIRE RATED WALLS INCLUDING (BUT NOT LIMITED TO) ELECTRICAL AND TEL/DATA OUTLETS SHALL BE STAGGERED SO THAT A MINIMUM OF 24" IS BETWEEN TWO OUTLETS OF EITHER SIDE OF WALL. OFFSET BOXES MINIMUM (1) STUD SPACE AND SEAL OPENINGS THROUGH THE PARITIONS AND FLOORS TO MAINTAIN ASSEMBLY RATING. ENTIRE ELECTRICAL BOX MUST BE SEALED WITH FIRE RESISTANT SEALANT AS PER NFPA.
8. ALL CONVENIENCE OUTLETS WITH SWITCHES TO BE SWITCHED AT TOP ONLY.
9. ALL SWITCHES TO BE 3'-10" ABOVE FINISHED FLOOR TO CENTERLINE OF SWITCH UNLESS OTHERWISE NOTED.
10. ALL CONVENIENCE OUTLETS ARE TO BE NO LOWER THAN 15" TO THE BOTTOM RECEPTACLE.
11. ALL INTERIOR WALL BRACKET FIXTURES TO BE AT 6'-6" ABOVE FINISHED FLOOR TO CENTERLINE OF FIXTURES (6'-10" AT BATHROOM MIRRORS).
12. ALL EXTERIOR BRACKET FIXTURES TO BE AT 6'-6" ABOVE FINISHED FLOOR TO CENTERLINE OF FIXTURE.
13. VERIFY LOCATION OF ALL RECEPTACLE FOR APPLIANCES WITH MANUFACTURER'S SPECIFICATIONS.
14. CABLE TELEVISION SERVICE SHALL BE WIRED TO EVERY TELEVISION RECEPTACLE,UNLESS OTHERWISE INSTRUCTED BY OWNER.
15. ALL ELECTRICAL INSTALLATION SHALL MEET THE REQUIREMENTS OF THE NATIONAL ELECTRICAL CODE. ALL MATERIAL AND EQUIPMENT SHALL BEAR THE LABEL OR APPROVALOF THE UNDERWRITERS LABORATORIES, INC.
16. ALL BATHROOM GFI OUTLETS TO BE DEDICATED TO (1) 20 AMP BREAKER.
17. GROUND FAULT INTERCEPTORS SHALL BE PROVIDED AT ALL BATHROOM AND KITCHEN OUTLETS AS PER SECTION 2-10-8 N.E.C.

ARCHITECTS LLC
240 WEST CRESCENT AVENUE
ALLENDALE, NJ 07401
TEL: 201.785.8855
www.zplusarchitects.com

PROJECT TEAM:

CIVIL
SCHWANEWEDE, HALS, & VINCE
111 LITTLETON RD #200
PARSIPPANY-TROY HILLS, NJ
201-337-0053

seal:

Michael Scro
NJ LIC# 18626

BALIWALA

10 BIRCH LANE, WALDWICK, NJ
City, State Zip

Copyright © 2019 , Z+ Architect, LLC

All dimensions and existing conditions shall be checked & verified by the contractor before proceeding with the work.

REV	DATE	DESCRIPTION

SHEET TITLE:

1ST FLOOR ELECTRICAL PLAN

DESIGN DELIVERABLE: PERMIT SET

ISSUE DATE: 06/23/25

PROJECT #: 2508

DRAWN BY: AR

CHECKED BY: MS

SHEET NUMBER: E-2

REVIT 2020

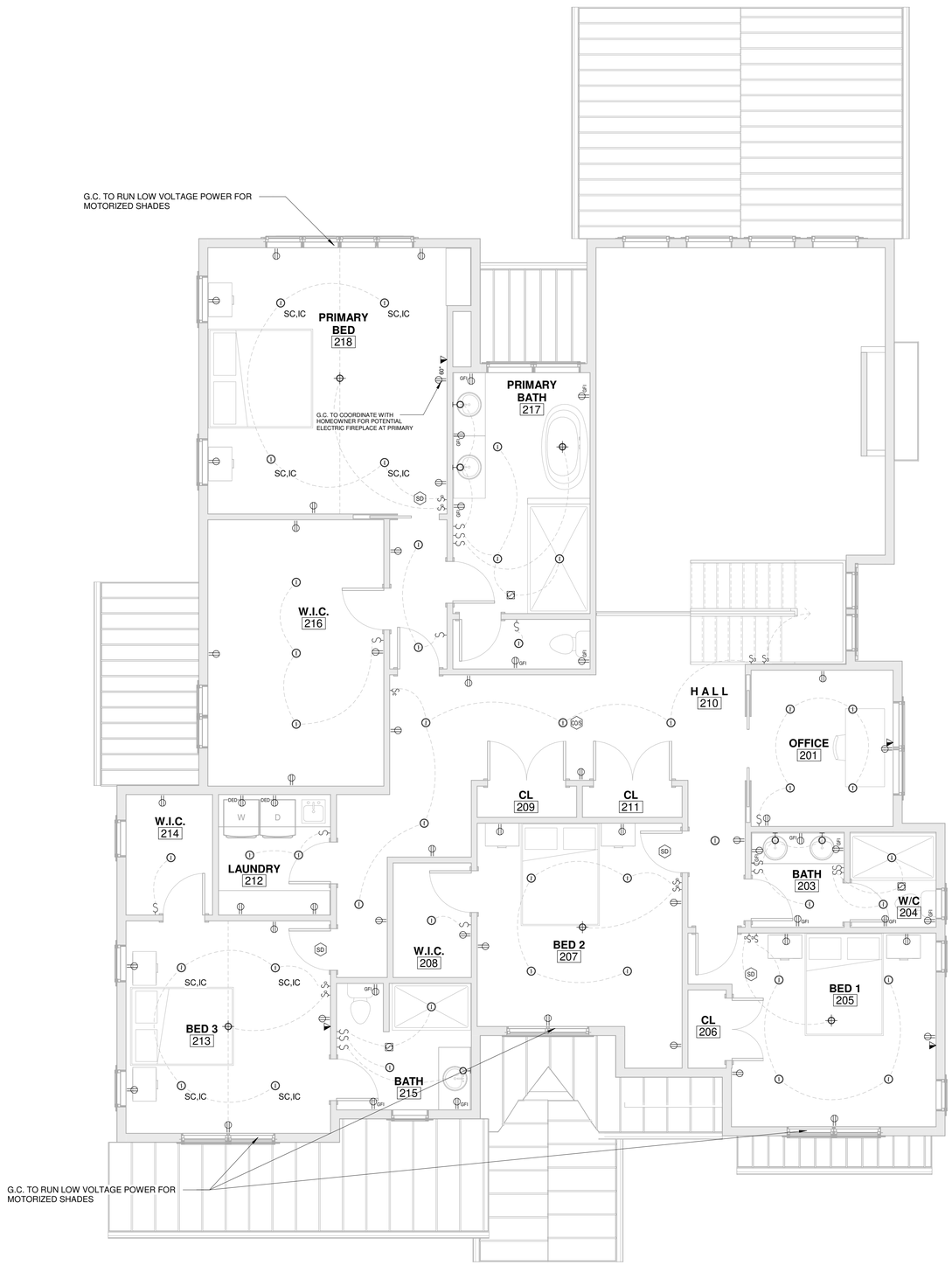

1 2ND FLOOR ELECTRICAL PLAN
1/4" = 1'-0"

ELECTRICAL LEGEND & SYMBOLS

- LIGHT SWITCH
- DIMMER SWITCH
- 3-WAY SWITCH
- 4-WAY SWITCH
- DUPLEX OUTLET
- GROUND FAULT INTERRUPT OUTLET
- WEATHER PROOF OUTLET
- DEDICATED OUTLET
- RECESSED FLOOR OUTLET
- TELEPHONE / CAT 5 / T.V. CABLE JACK
- WALL MOUNTED LIGHT FIXTURE
- WALL MOUNTED CLOSET RATED FIXTURE
- RECESSED PANASONIC WHISPER EXHAUST FAN
- HALO, 4" RECESSED LED WALL WASH WITH BAFFLE; 992W
- 120V AC SMOKE & CARBON MONOXIDE ALARM W/ BATTERY BACK UP; FIRST ALERT MODEL:SC9120B
- 120V AC SMOKE ALARM W/ BATTERY BACK UP; FIRST ALERT MODEL: 9120B
- DMF LIGHTING, H SERIES, 4" RECESSED, HM3C MODULE WITH INTEGRATED WARM DIM, IEC RATED, WET LOCATIONS. *(BAR HANGERS ARE AVAILABLE FROM MANUFACTURE)*
  - FINAL TRIM OPTIONS TO BE SELECTED BY OWNER
- SURFACE MOUNTED LIGHT FIXTURE
- SURFACE MOUNTED LIGHT FIXTURE WITH FAN
- LOW VOLTAGE UNDER CABINET LIGHT
- LED 1 x 4 FIXTURE

GENERAL NOTES:

1. SMOKE ALARMS SHALL BE LISTED IN ACCORDANCE WITH UL 217 AND INSTALLED PER NFPA 72 AND IBC RESIDENTIAL 2021 - NJ EDITION.
2. ALL ALARMS SHALL BE INTERCONNECTED IN SUCH A MANNER THAT THE ACTUATION OF ONE ALARM WILL ACTIVATE ALL OF THE ALARMS.
3. ALL SPECIFIED RECESSED LIGHTS TO BE NON-IC RATED EXCEPT AT THE FOLLOWING LOCATIONS :
   A) IC-RATED RECESSED CAN LIGHT AT INSULATED CEILING.
   B) UL/CUL LISTED RECESSED CAN LIGHT AT SHOWER AND OTHER MOISTURE AREA.
   C) INSTALL FIREBOX AT FIRE RATED CEILING ASSEMBLIES.
4. CONTRACTOR TO PROVIDE HARD WIRING FOR NEW SMOKE DETECTORS AND/OR CARBON MONOXIDE/SMOKE DETECTOR COMBOS AS REQUIRED BY CODE. ONE SHALL BE LOCATED IN EACH SLEEPING ROOM, OUTSIDE EACH SEPARATE SLEEPING AREA IN THE IMMEDIATE VICINITY OF THE BEDROOMS, AND ONE ON EACH FLOOR, INCLUDING BASEMENTS AND HABITABLE ATTICS.
5. ALL ELECTRICAL WIRING DEVICES TO BE LEVITON - DECORA OR APPROVED EQUAL.
6. VERIFY IN FIELD FINAL LOCATION OF SWITCHES, OUTLETS, AND DATA PORTS WITH OWNER.
7. ALL OUTLET LOCATIONS SHOWN ARE DIAGRAMMATIC. ALL WALL PENETRATIONS BETWEEN DEMISING / FIRE RATED WALLS INCLUDING (BUT NOT LIMITED TO) ELECTRICAL AND TEL/DATA OUTLETS SHALL BE STAGGERED SO THAT A MINIMUM OF 24" IS BETWEEN TWO OUTLETS OF EITHER SIDE OF WALL. OFFSET BOXES MINIMUM (1) STUD SPACE AND SEAL OPENINGS THROUGH THE PARITIONS AND FLOORS TO MAINTAIN ASSEMBLY RATING. ENTIRE ELECTRICAL BOX MUST BE SEALED WITH FIRE RESISTANT SEALANT AS PER NFPA.
8. ALL CONVENIENCE OUTLETS WITH SWITCHES TO BE SWITCHED AT TOP ONLY.
9. ALL SWITCHES TO BE 3'-10" ABOVE FINISHED FLOOR TO CENTERLINE OF SWITCH UNLESS OTHERWISE NOTED.
10. ALL CONVENIENCE OUTLETS ARE TO BE NO LOWER THAN 15" TO THE BOTTOM RECEPTACLE.
11. ALL INTERIOR WALL BRACKET FIXTURES TO BE AT 6'-6" ABOVE FINISHED FLOOR TO CENTERLINE OF FIXTURES (6'-10" AT BATHROOM MIRRORS).
12. ALL EXTERIOR BRACKET FIXTURES TO BE AT 6'-6" ABOVE FINISHED FLOOR TO CENTERLINE OF FIXTURE.
13. VERIFY LOCATION OF ALL RECEPTACLE FOR APPLIANCES WITH MANUFACTURER'S SPECIFICATIONS.
14. CABLE TELEVISION SERVICE SHALL BE WIRED TO EVERY TELEVISION RECEPTACLE,UNLESS OTHERWISE INSTRUCTED BY OWNER.
15. ALL ELECTRICAL INSTALLATION SHALL MEET THE REQUIREMENTS OF THE NATIONAL ELECTRICAL CODE. ALL MATERIAL AND EQUIPMENT SHALL BEAR THE LABEL OR APPROVALOF THE UNDERWRITERS LABORATORIES, INC.
16. ALL BATHROOM GFI OUTLETS TO BE DEDICATED TO (1) 20 AMP BREAKER.
17. GROUND FAULT INTERCEPTORS SHALL BE PROVIDED AT ALL BATHROOM AND KITCHEN OUTLETS AS PER SECTION 2-10-8 N.E.C.

ZplusA ARCHITECTS LLC
240 WEST CRESCENT AVENUE
ALLENDALE, NJ 07401
TEL: 201.785.8855
www.zplusarchitects.com

PROJECT TEAM:

CIVIL
SCHWANEWEDE, HALS, & VINCE
111 LITTLETON RD #200
PARSIPPANY-TROY HILLS, NJ
201-337-0053

seal:

Michael Scro
NJ LIC# 18626

BALIWALA

10 BIRCH LANE, WALDWICK, NJ
City, State Zip

Copyright © 2019 , Z+ Architect, LLC

All dimensions and existing conditions shall be checked & verified by the contractor before proceeding with the work.

REV	DATE	DESCRIPTION

SHEET TITLE:

2ND FLOOR ELECTRICAL PLAN

DESIGN DELIVERABLE: PERMIT SET

ISSUE DATE: 06/23/25

PROJECT #: 2508

DRAWN BY: AR

CHECKED BY: MS

SHEET NUMBER:

E-3

REVIT 2020